TO BE USED ONLY WITH SPECIFIC APPROVAL OF THE CITY ENGINEER

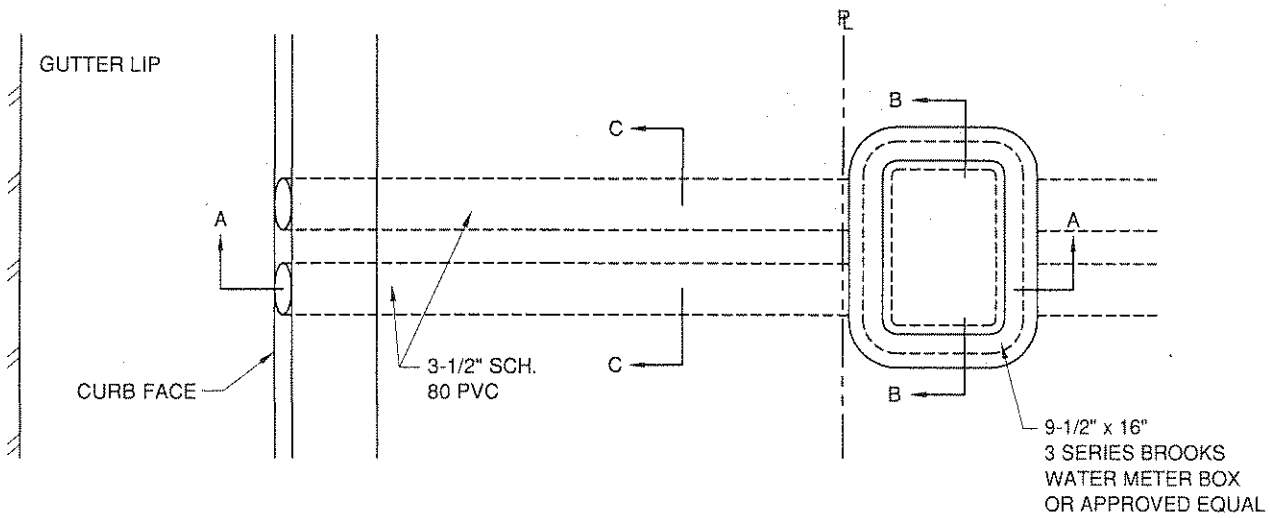

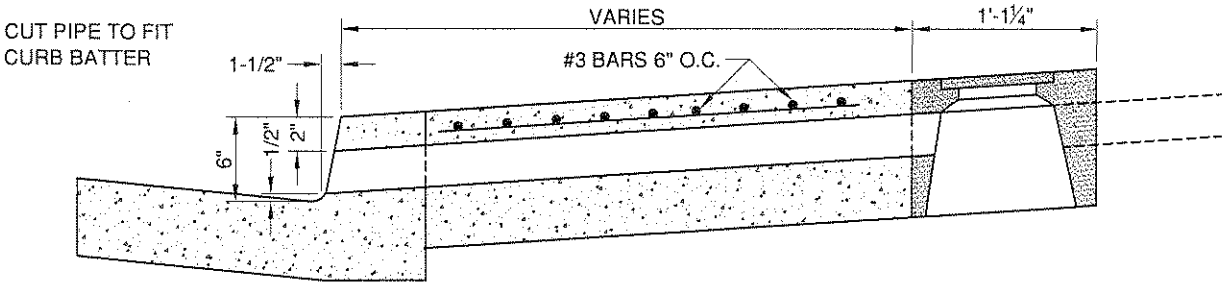

SECTION A-A
(6" CURB FACE)

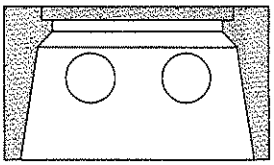

SECTION B-B

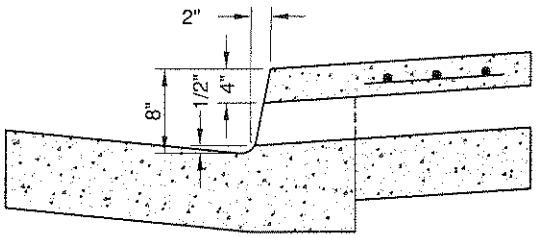

SECTION A-A
(8" CURB FACE)

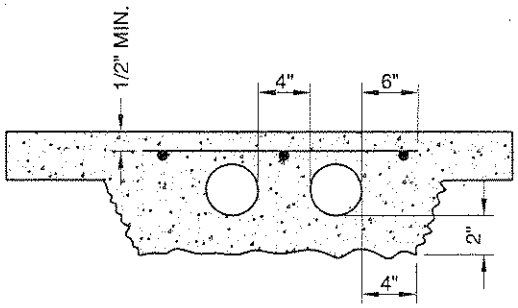

SECTION C-C

APPROVED:

P.W. DIRECTOR / CITY ENGINEER

REVISED DATE: 5/15/08

WESTMINSTER CALIFORNIA

City of Westminster

DEPARTMENT OF PUBLIC WORKS

SIDEWALK DRAIN

STANDARD NUMBER

211A