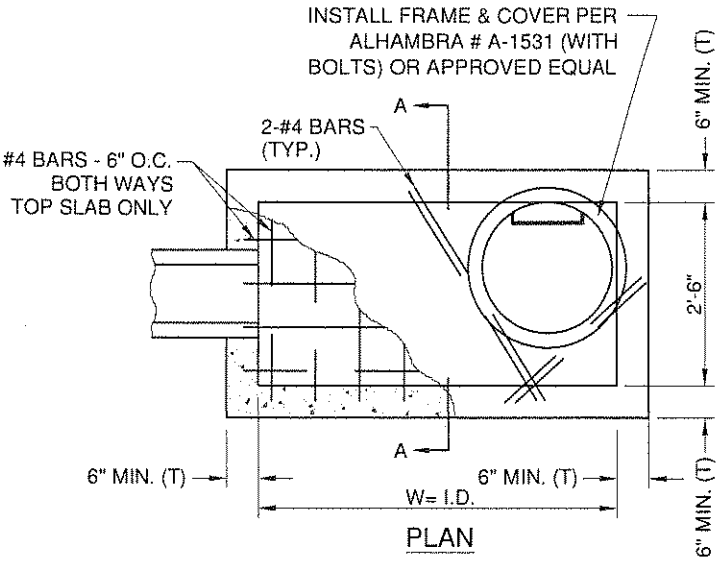

PLAN

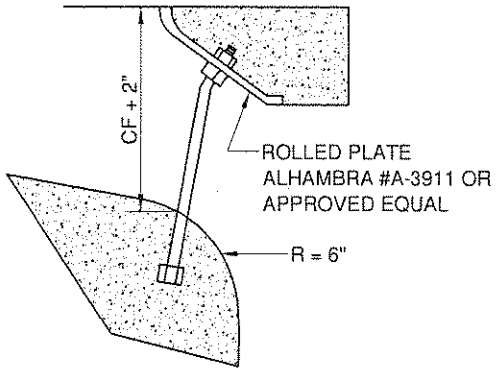

INLET DETAIL

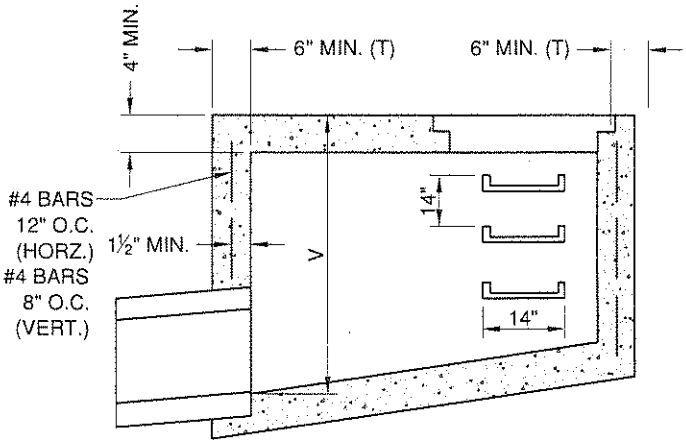

ELEVATION

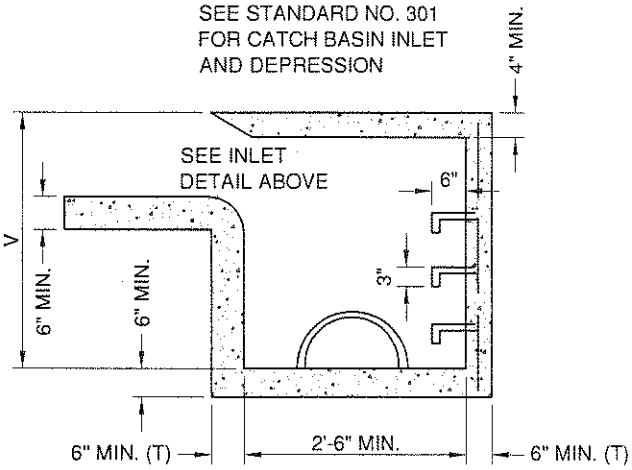

NOTES:

1. ALL CONCRETE SHALL BE 560-C-3250.
2. TOP OF CATCH BASIN TO BLEND WITH SIDEWALK.
3. STEEL MAY BE OMITTED FROM SIDE WALLS PROVIDED T = 8" FOR V = 4'-8' AND T= 10' FOR V = 8'-12'.
4. "W" TO BE NOT LESS THAN 3.5' NOR MORE THAN 21'.
5. USE STANDARD LOCAL DEPRESSION PLAN NO. 301.
6. PLACE MANHOLE ADJACENT TO BACK WALL AWAY FROM OUTLET PIPE.
7. REINFORCING STEEL SHALL HAVE A COVER OF 1-1/2" OF CONCRETE, UNLESS OTHERWISE INDICATED.

STRUCTURAL STEEL SHAPES

ITEM	W=3'-6"	W=7'	W=14'	W=21'
SUPPORT BOLTS	—	—	1	2
EYE BOLTS	2	3	4	5
STEEL ANGLE	4' 6"	8' 0"	15' 0"	22' 0"
PROTECTION BAR	3' 4"	6' 10"	13' 10"	20' 10"
ANCHORS	2	3	5	7
STD.M.H.F.& C.NO.12	1	1	1	1
STEEL STEPS	16" O.C.			

APPROVED:

P.W. DIRECTOR / CITY ENGINEER

REVISED DATE: 5/15/08

WESTMINSTER CALIFORNIA

City of Westminster

DEPARTMENT OF PUBLIC WORKS

CATCH BASIN

STANDARD NUMBER

302