NOTES:
CLEAN & PAINT VALVE CAN LIDS
HYDRANT - RED
WATER MAIN - BLUE

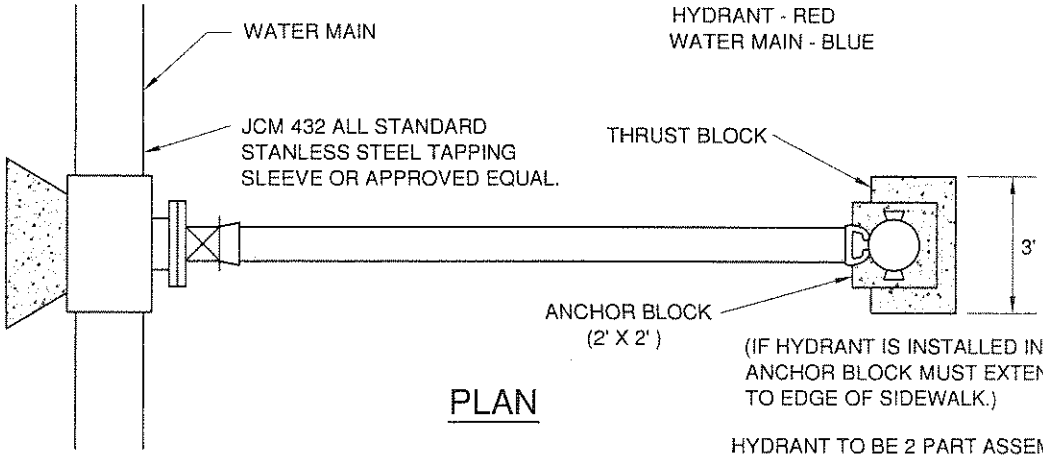

(IF HYDRANT IS INSTALLED IN PARKWAY, ANCHOR BLOCK MUST EXTEND FROM CURB TO EDGE OF SIDEWALK.)

PLAN

HYDRANT TO BE 2 PART ASSEMPLY OR APPROVED EQUAL. JONES J-3765R.

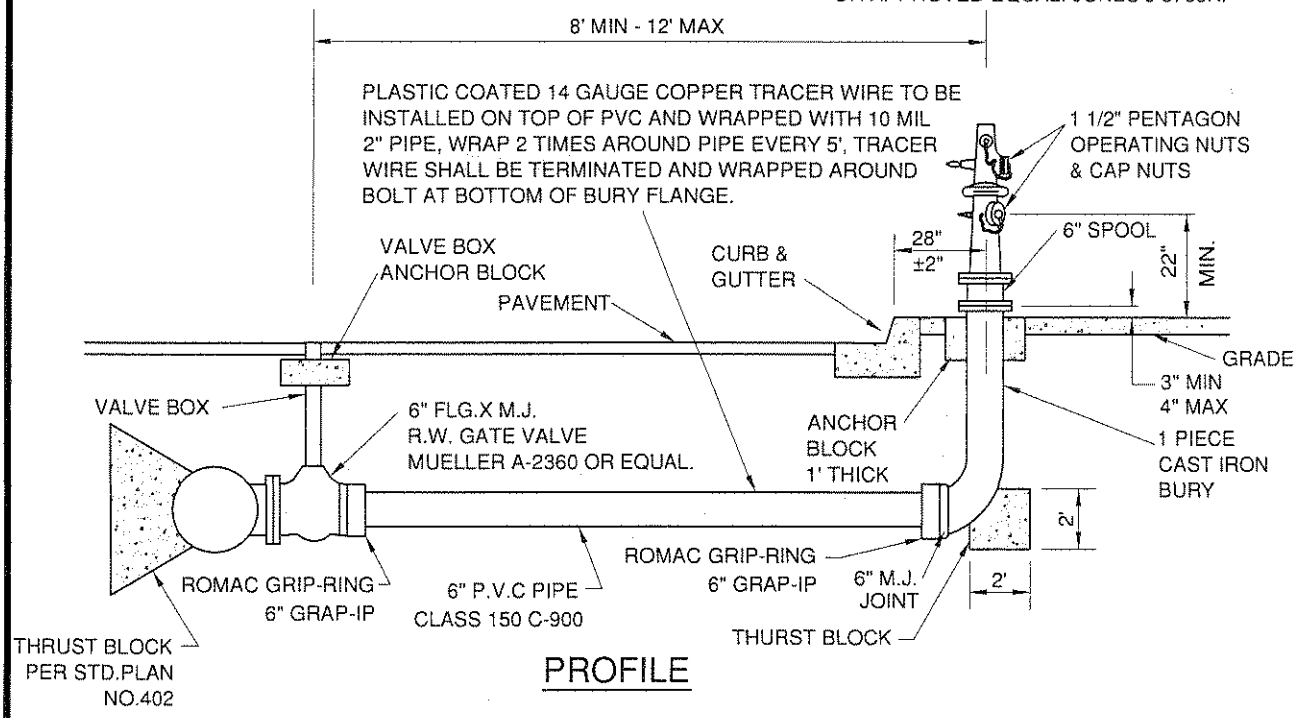

PROFILE

NOTES:

1. MINIMUM DISTANCE BETWEEN HYDRANT AND DRIVEWAY TOP OF "X" = 4'
2. HYDRANT INSTALLATION SHALL BE PER STANDARD WATER NOTES
3. THRUST BLOCKS SHALL BE 5-B-2000
4. MINIMUM VALVE OPENING 5 1/4"
5. EXISTING SIDEWALK SHALL BE SAWCUT ALONG SCORE LINES AND REPLACED AS REQUIRED BY HYDRANT INSTALLATION
6. WHERE SIDEWALK IS LESS THAN 6' WIDE, HYDRANT SHALL BE INSTALLED AS DIRECTED BY CITY ENGINEER
7. INSTALL HOLLOW SHEAR BOLTS ON TOP & BOTTOM FLANGES OF SPOOL ON HYDRANT NUTS UP-FILL BOLTS WITH GREASE
8. INSTALL VALVE MARKER & ARROW & RAISED BLUE MARKER PER STD # 417
9. FIRE HYDRANT SHALL BE INSTALLED PRE-PAINTED FROM MANUFACTURUR, WITH COLOR: LS 345 SAFETY YELLOW. ANY NECESSARY TOUCH UP SHALL BE OF SAME COLOR AT END OF CONSTRUCTION

APPROVED:
Marwan Youssef
P.W. DIRECTOR / CITY ENGINEER
REVISED DATE: 5/15/08

WESTMINSTER CALIFORNIA

City of Westminster
DEPARTMENT OF PUBLIC WORKS

FIRE HYDRANT AND HYDRANT VALVE INSTALLATION

STANDARD NUMBER
404