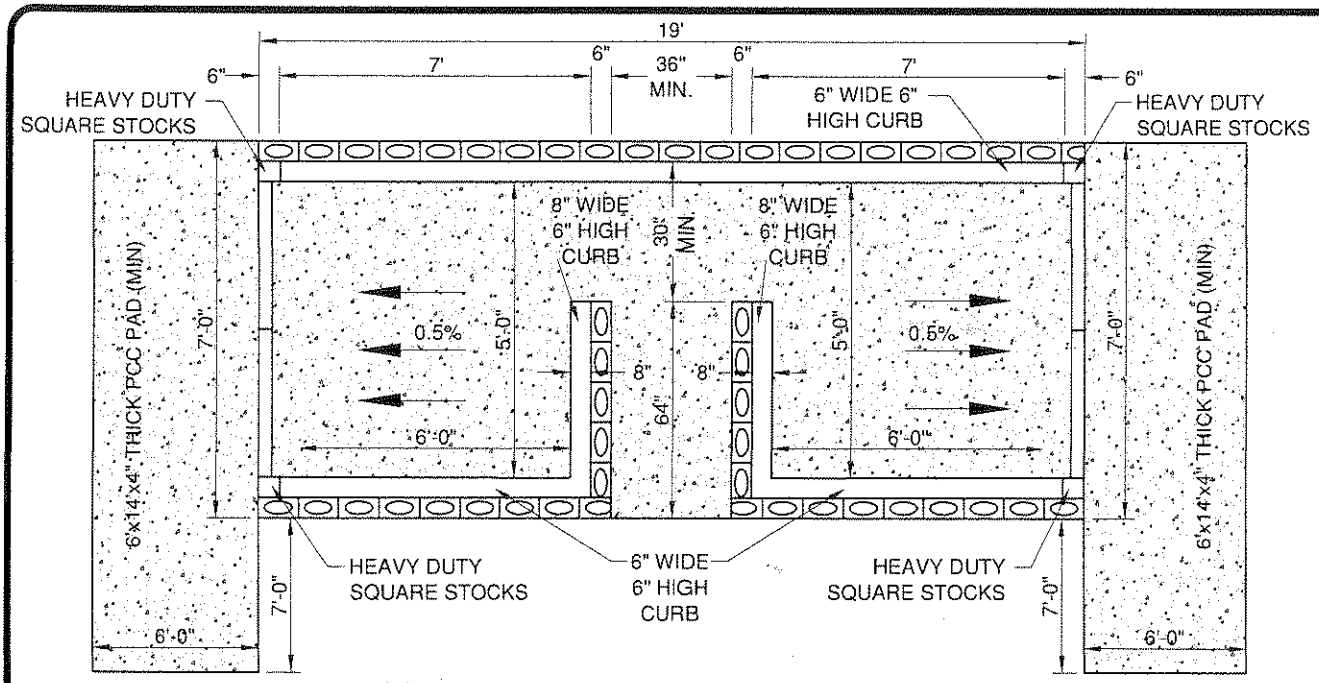

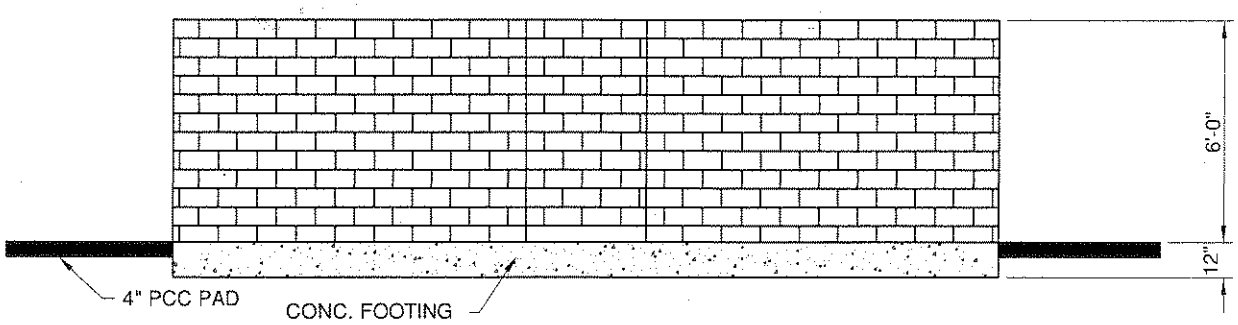

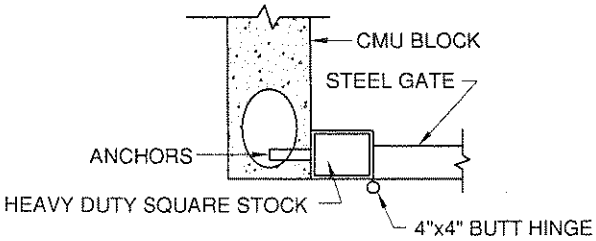

NOTES:

* MASONRY CONSTRUCTION SHALL BE DONE PER STD. DWG. # 607.
* MATERIALS: SIX INCH BLOCK CONSTRUCTION WITH WOOD OR METAL OPAQUE GATES. SET ON FOUR INCH P.C.C. PAD. PAD TO BE AT GROUND LEVEL. ALL HARDWARE TO BE CORROSION RESISTANT. MATERIALS AND SETBACKS SHALL CONFORM TO CITY STDS.
* PROVIDE 4" P.C.C. APRON IN FRONT OF ENCLOSURE GATES FOR BIN UNLOADING.
* A TRELLIS OR LATTICE COVER REQUIRED WHEN ENCLOSURE IS LOCATED IN VICINITY OF TWO-STORY RESIDENTIAL STRUCTURES.
* ANY VARIATIONS FROM THESE STADARDS MUST BE APPROVED BY THE CITY ENGINEER.

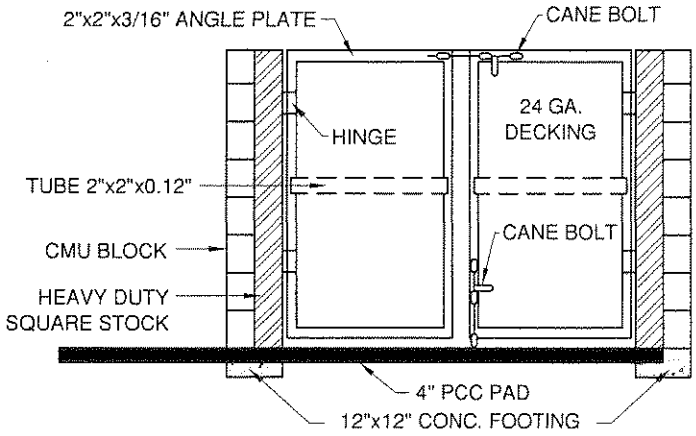

APPROVED:

P.W. DIRECTOR / CITY ENGINEER

REVISED DATE: 5/15/08

WESTMINSTER CALIFORNIA

City of Westminster

DEPARTMENT OF PUBLIC WORKS

DOUBLE TRASH ENCLOSURE (SIDE DOOR)

STANDARD NUMBER

613