Counts Unlimited Inc.
25286 Jaclyn Avenue
Moreno Valley, CA 92557
951-485-7934

City of Garden Grove
N/S: Brookhurst Street
E/W: Hazard Avenue
Weather: Sunny

File Name : GGBRHAAM
Site Code : 041328
Start Date : 9/3/2008
Page No : 1

Groups Printed- Total Volume

	Brookhurst Street Southbound				Hazard Avenue Westbound				Brookhurst Street Northbound				Hazard Avenue Eastbound				
Start Time	Left	Thru	Right	App. Total	Left	Thru	Right	App. Total	Left	Thru	Right	App. Total	Left	Thru	Right	App. Total	Int. Total
07:00 AM	10	278	9	297	18	46	19	83	9	112	4	125	18	40	10	68	573
07:15 AM	12	345	17	374	16	72	16	104	16	171	10	197	20	62	15	97	772
07:30 AM	23	415	9	447	17	84	28	129	17	174	7	198	34	76	21	131	905
07:45 AM	27	420	19	466	19	90	27	136	13	187	7	207	37	87	25	149	958
Total	72	1458	54	1584	70	292	90	452	55	644	28	727	109	265	71	445	3208
08:00 AM	28	395	19	442	21	61	28	110	18	195	13	226	48	88	16	152	930
08:15 AM	29	348	16	393	23	71	34	128	25	204	10	239	33	97	20	150	910
08:30 AM	35	369	22	426	27	75	36	138	31	230	14	275	52	89	18	159	998
08:45 AM	30	369	26	425	24	71	40	135	20	227	10	257	49	92	26	167	984
Total	122	1481	83	1686	95	278	138	511	94	856	47	997	182	366	80	628	3822
Grand Total	194	2939	137	3270	165	570	228	963	149	1500	75	1724	291	631	151	1073	7030
Apprch %	5.9	89.9	4.2		17.1	59.2	23.7		8.6	87	4.4		27.1	58.8	14.1		
Total %	2.8	41.8	1.9	46.5	2.3	8.1	3.2	13.7	2.1	21.3	1.1	24.5	4.1	9	2.1	15.3	

	Brookhurst Street Southbound				Hazard Avenue Westbound				Brookhurst Street Northbound				Hazard Avenue Eastbound				
Start Time	Left	Thru	Right	App. Total	Left	Thru	Right	App. Total	Left	Thru	Right	App. Total	Left	Thru	Right	App. Total	Int. Total
Peak Hour Analysis From 07:00 AM to 08:45 AM - Peak 1 of 1																	
Peak Hour for Entire Intersection Begins at 08:00 AM																	
08:00 AM	28	395	19	442	21	61	28	110	18	195	13	226	48	88	16	152	930
08:15 AM	29	348	16	393	23	71	34	128	25	204	10	239	33	97	20	150	910
08:30 AM	35	369	22	426	27	75	36	138	31	230	14	275	52	89	18	159	998
08:45 AM	30	369	26	425	24	71	40	135	20	227	10	257	49	92	26	167	984
Total Volume	122	1481	83	1686	95	278	138	511	94	856	47	997	182	366	80	628	3822
% App. Total	7.2	87.8	4.9		18.6	54.4	27		9.4	85.9	4.7		29	58.3	12.7		
PHF	.871	.937	.798	.954	.880	.927	.863	.926	.758	.930	.839	.906	.875	.943	.769	.940	.957

Counts Unlimited Inc.
25286 Jaclyn Avenue
Moreno Valley, CA 92557
951-485-7934

City of Garden Grove
N/S: Brookhurst Street
E/W: Hazard Avenue
Weather: Sunny

File Name : GGBRHAPM
Site Code : 041328
Start Date : 9/3/2008
Page No : 2

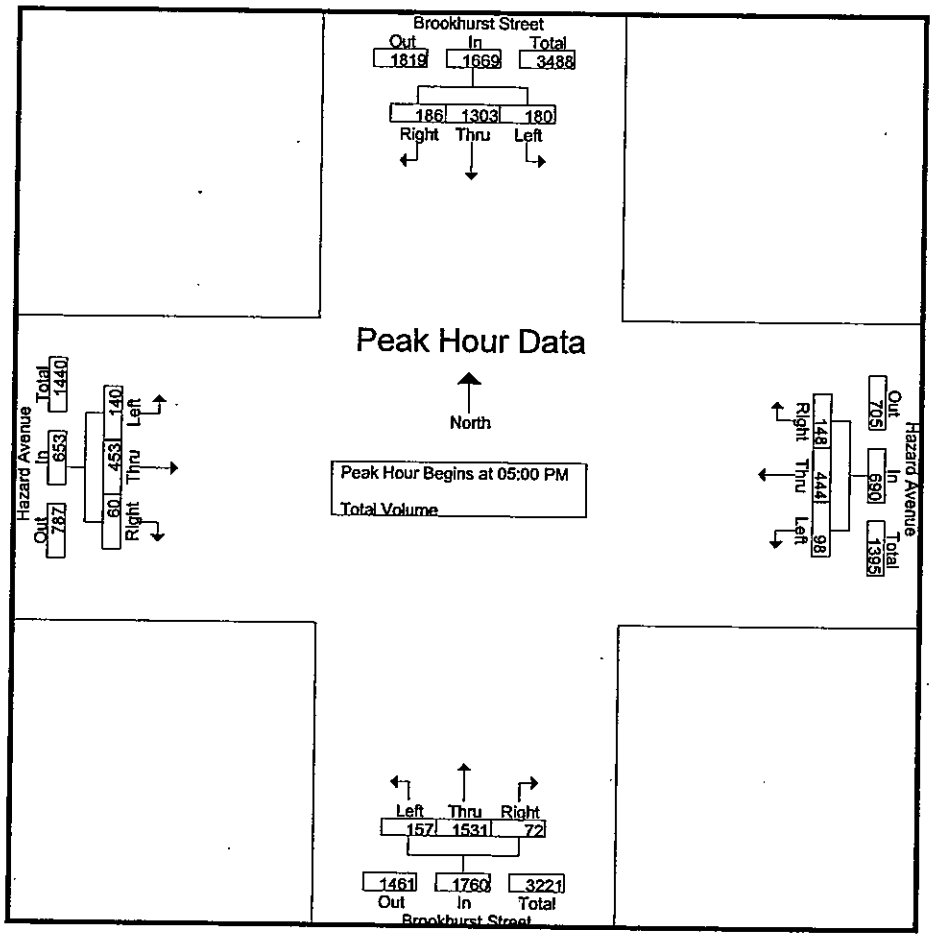

Peak Hour Analysis From 04:00 PM to 05:45 PM - Peak 1 of 1

Peak Hour for Each Approach Begins at:

	05:00 PM				05:00 PM				05:00 PM				05:00 PM			
+0 mins.	41	321	51	413	30	104	34	168	33	381	24	438	31	119	12	162
+15 mins.	45	277	44	366	25	106	41	172	42	376	16	434	43	116	17	176
+30 mins.	40	360	57	457	18	117	37	172	36	414	18	468	36	108	12	156
+45 mins.	54	345	34	433	25	117	36	178	46	360	14	420	30	110	19	159
Total Volume	180	1303	186	1669	98	444	148	690	157	1531	72	1760	140	453	60	653
% App. Total	10.8	78.1	11.1		14.2	64.3	21.4		8.9	87	4.1		21.4	69.4	9.2	
PHF	.833	.905	.816	.913	.817	.949	.902	.969	.853	.925	.750	.940	.814	.952	.789	.928

Counts Unlimited Inc.
25286 Jaclyn Avenue
Moreno Valley, CA 92557
951-485-7934

City of Garden Grove
N/S: Brookhurst Street
E/W: Hazard Avenue
Weather: Sunny

File Name : GGBRHAPM
Site Code : 041328
Start Date : 9/3/2008
Page No : 1

Groups Printed- Total Volume

	Brookhurst Street Southbound				Hazard Avenue Westbound				Brookhurst Street Northbound				Hazard Avenue Eastbound				
Start Time	Left	Thru	Right	App. Total	Left	Thru	Right	App. Total	Left	Thru	Right	App. Total	Left	Thru	Right	App. Total	Int. Total
04:00 PM	31	284	44	359	17	101	36	154	21	336	17	374	36	80	9	125	1012
04:15 PM	36	292	34	362	23	107	37	167	28	315	22	365	37	89	28	154	1048
04:30 PM	32	322	41	395	23	75	47	145	30	337	19	386	38	100	15	153	1079
04:45 PM	46	325	42	413	23	79	36	138	29	351	15	395	48	86	18	152	1098
Total	145	1223	161	1529	86	362	156	604	108	1339	73	1520	159	355	70	584	4237
05:00 PM	41	321	51	413	30	104	34	168	33	381	24	438	31	119	12	162	1181
05:15 PM	45	277	44	366	25	106	41	172	42	376	16	434	43	116	17	176	1148
05:30 PM	40	360	57	457	18	117	37	172	36	414	18	468	36	108	12	156	1253
05:45 PM	54	345	34	433	25	117	36	178	46	360	14	420	30	110	19	159	1190
Total	180	1303	186	1669	98	444	148	690	157	1531	72	1760	140	453	60	653	4772
Grand Total	325	2526	347	3198	184	806	304	1294	265	2870	145	3280	299	808	130	1237	9009
Apprch %	10.2	79	10.9		14.2	62.3	23.5		8.1	87.5	4.4		24.2	65.3	10.5		
Total %	3.6	28	3.9	35.5	2	8.9	3.4	14.4	2.9	31.9	1.6	36.4	3.3	9	1.4	13.7	

	Brookhurst Street Southbound				Hazard Avenue Westbound				Brookhurst Street Northbound				Hazard Avenue Eastbound				
Start Time	Left	Thru	Right	App. Total	Left	Thru	Right	App. Total	Left	Thru	Right	App. Total	Left	Thru	Right	App. Total	Int. Total
Peak Hour Analysis From 04:00 PM to 05:45 PM - Peak 1 of 1																	
Peak Hour for Entire Intersection Begins at 05:00 PM																	
05:00 PM	41	321	51	413	30	104	34	168	33	381	24	438	31	119	12	162	1181
05:15 PM	45	277	44	366	25	106	41	172	42	376	16	434	43	116	17	176	1148
05:30 PM	40	360	57	457	18	117	37	172	36	414	18	468	36	108	12	156	1253
05:45 PM	54	345	34	433	25	117	36	178	46	360	14	420	30	110	19	159	1190
Total Volume	180	1303	186	1669	98	444	148	690	157	1531	72	1760	140	453	60	653	4772
% App. Total	10.8	78.1	11.1		14.2	64.3	21.4		8.9	87	4.1		21.4	69.4	9.2		
PHF	.833	.905	.816	.913	.817	.949	.902	.969	.853	.925	.750	.940	.814	.952	.789	.928	.952

Counts Unlimited Inc.
25286 Jaclyn Avenue
Moreno Valley, CA 92557
951-485-7934

City of Westminster
N/S: Brookhurst Street
E/W: Hazard Avenue
Weather: Sunny

File Name : WMBRHASAT
Site Code : 04132865
Start Date : 9/6/2008
Page No : 2

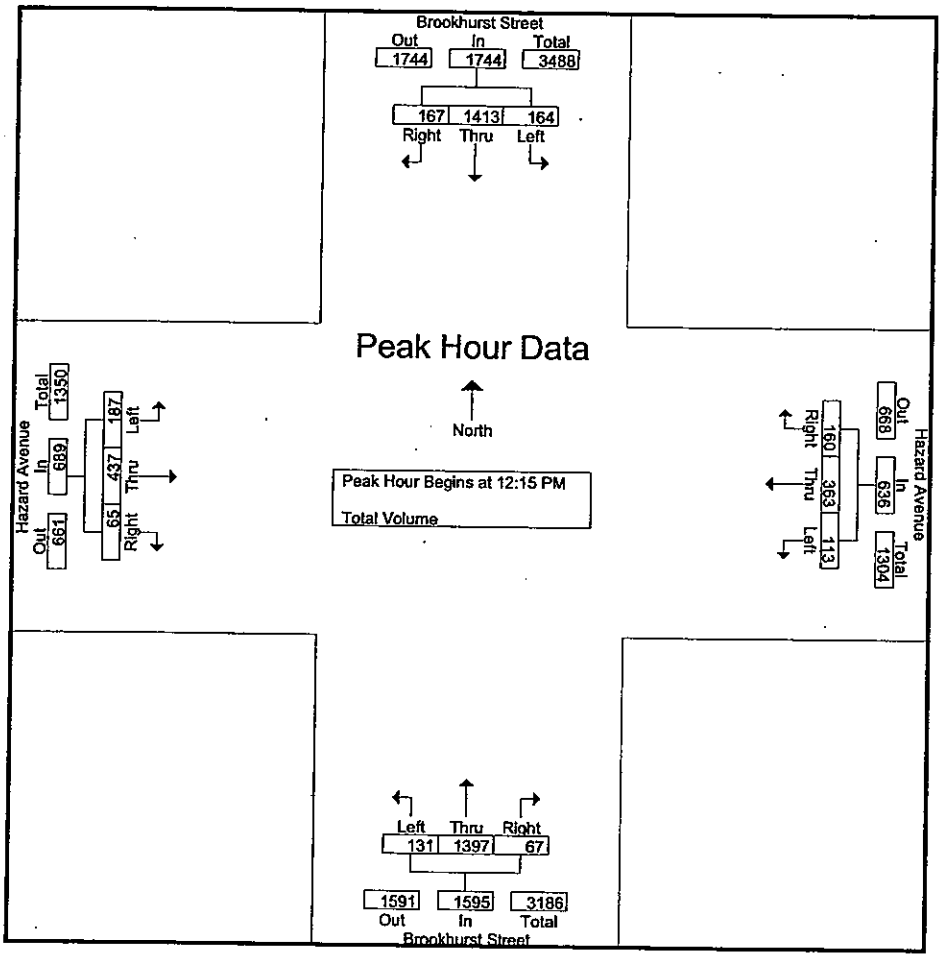

Peak Hour Analysis From 12:00 PM to 01:45 PM - Peak 1 of 1

Peak Hour for Each Approach Begins at:

	12:30 PM				12:00 PM				12:00 PM				12:45 PM			
+0 mins.	47	356	41	444	33	101	38	172	29	371	12	412	48	108	13	169
+15 mins.	46	337	46	429	33	95	39	167	27	349	19	395	48	108	23	179
+30 mins.	41	391	43	475	25	89	38	152	41	375	23	439	48	106	19	173
+45 mins.	42	326	43	411	28	93	44	165	31	316	13	360	57	97	15	169
Total Volume	176	1410	173	1759	119	378	159	656	128	1411	67	1606	201	419	70	690
% App. Total	10	80.2	9.8		18.1	57.6	24.2		8	87.9	4.2		29.1	60.7	10.1	
PHF	.936	.902	.940	.926	.902	.936	.903	.953	.780	.941	.728	.915	.882	.970	.761	.964

Counts Unlimited Inc.
25286 Jaclyn Avenue
Moreno Valley, CA 92557
951-485-7934

City of Westminster
N/S: Brookhurst Street
E/W: Hazard Avenue
Weather: Sunny

File Name : WMBRHASAT
Site Code : 04132865
Start Date : 9/6/2008
Page No : 1

Groups Printed- Total Volume

	Brookhurst Street Southbound				Hazard Avenue Westbound				Brookhurst Street Northbound				Hazard Avenue Eastbound				
Start Time	Left	Thru	Right	App. Total	Left	Thru	Right	App. Total	Left	Thru	Right	App. Total	Left	Thru	Right	App. Total	Int. Total
12:00 PM	32	393	45	470	33	101	38	172	29	371	12	412	41	90	20	151	1205
12:15 PM	30	329	37	396	33	95	39	167	27	349	19	395	46	116	17	179	1137
12:30 PM	47	356	41	444	25	89	38	152	41	375	23	439	45	105	12	162	1197
12:45 PM	46	337	46	429	28	93	44	165	31	316	13	360	48	108	13	169	1123
Total	155	1415	169	1739	119	378	159	656	128	1411	67	1606	180	419	62	661	4662
01:00 PM	41	391	43	475	27	86	39	152	32	357	12	401	48	108	23	179	1207
01:15 PM	42	326	43	411	29	103	33	165	28	333	11	372	48	106	19	173	1121
01:30 PM	32	335	52	419	22	80	34	136	29	300	15	344	57	97	15	169	1068
01:45 PM	31	340	31	402	26	84	43	153	27	364	13	404	48	90	14	152	1111
Total	146	1392	169	1707	104	353	149	606	116	1354	51	1521	201	401	71	673	4507
Grand Total	301	2807	338	3446	223	731	308	1262	244	2765	118	3127	381	820	133	1334	9169
Apprch %	8.7	81.5	9.8		17.7	57.9	24.4		7.8	88.4	3.8		28.6	61.5	10		
Total %	3.3	30.6	3.7	37.6	2.4	8	3.4	13.8	2.7	30.2	1.3	34.1	4.2	8.9	1.5	14.5	

	Brookhurst Street Southbound				Hazard Avenue Westbound				Brookhurst Street Northbound				Hazard Avenue Eastbound				
Start Time	Left	Thru	Right	App. Total	Left	Thru	Right	App. Total	Left	Thru	Right	App. Total	Left	Thru	Right	App. Total	Int. Total
Peak Hour Analysis From 12:00 PM to 01:45 PM - Peak 1 of 1																	
Peak Hour for Entire Intersection Begins at 12:15 PM																	
12:15 PM	30	329	37	396	33	95	39	167	27	349	19	395	46	116	17	179	1137
12:30 PM	47	356	41	444	25	89	38	152	41	375	23	439	45	105	12	162	1197
12:45 PM	46	337	46	429	28	93	44	165	31	316	13	360	48	108	13	169	1123
01:00 PM	41	391	43	475	27	86	39	152	32	357	12	401	48	108	23	179	1207
Total Volume	164	1413	167	1744	113	363	160	636	131	1397	67	1595	187	437	65	689	4664
% App. Total	9.4	81	9.6		17.8	57.1	25.2		8.2	87.6	4.2		27.1	63.4	9.4		
PHF	.872	.903	.908	.918	.856	.955	.909	.952	.799	.931	.728	.908	.974	.942	.707	.962	.966

Intersection Turning Movement

Prepared by:

National Data & Surveying Services

N-S STREET: Brookhurst St DATE: 11/14/2007 LOCATION: City of Westminster

E-W STREET: Bolsa Ave DAY: WEDNESDAY PROJECT# 07-1311-046

	NORTHBOUND			SOUTHBOUND			EASTBOUND			WESTBOUND			
	NL	NT	NR	SL	ST	SR	EL	ET	ER	WL	WT	WR	TOTAL
LANES:	2	3	0	2	2.5	1.5	2	2.5	0.5	2	3	1	
6:00 AM													
6:15 AM													
6:30 AM													
6:45 AM													
7:00 AM													
7:15 AM	10	171	25	25	393	17	19	101	39	31	98	26	955
7:30 AM	32	199	39	26	480	29	32	126	38	42	124	39	1206
7:45 AM	40	251	60	33	385	22	25	131	52	53	185	32	1269
8:00 AM	34	189	60	39	356	32	32	153	48	71	147	55	1216
8:15 AM	39	207	45	48	348	30	35	162	27	53	129	42	1165
8:30 AM	25	213	33	47	296	48	46	129	46	40	119	43	1085
8:45 AM	24	196	38	51	314	55	53	111	29	43	135	44	1093
9:00 AM	52	186	44	43	216	54	29	131	48	39	147	37	1026
9:15 AM													
9:30 AM													
9:45 AM													
10:00 AM													
10:15 AM													
10:30 AM													
10:45 AM													
11:00 AM													
11:15 AM													
11:30 AM													
11:45 AM													
TOTAL VOLUMES =	NL 256	NT 1612	NR 344	SL 312	ST 2788	SR 287	EL 271	ET 1044	ER 327	WL 372	WT 1084	WR 318	TOTAL 9015

AM Peak Hr Begins at: 730 AM

PEAK VOLUMES =	145	846	204	146	1569	113	124	572	165	219	585	168	4856
PEAK HR. FACTOR:		0.851			0.854			0.924			0.890		0.957

CONTROL: Signalized

Intersection Turning Movement

Prepared by:

National Data & Surveying Services

N-S STREET: Brookhurst St DATE: 11/14/2007 LOCATION: City of Westminster

E-W STREET: Bolsa Ave DAY: WEDNESDAY PROJECT# 07-1311-046

	NORTHBOUND			SOUTHBOUND			EASTBOUND			WESTBOUND			
	NL	NT	NR	SL	ST	SR	EL	ET	ER	WL	WT	WR	TOTAL
LANES:	2	3	0	2	2.5	1.5	2	2.5	0.5	2	3	1	
1:00 PM													
1:15 PM													
1:30 PM													
1:45 PM													
2:00 PM													
2:15 PM													
2:30 PM													
2:45 PM													
3:00 PM													
3:15 PM													
3:30 PM													
3:45 PM													
4:00 PM													
4:15 PM													
4:30 PM	63	322	44	35	282	80	81	195	40	68	193	45	1448
4:45 PM	60	375	60	52	252	77	98	185	34	68	187	57	1505
5:00 PM	80	344	38	54	263	66	105	181	45	61	213	59	1509
5:15 PM	70	364	51	50	288	67	88	194	48	58	172	58	1508
5:30 PM	75	312	44	33	251	51	79	170	47	75	187	56	1380
5:45 PM	63	332	42	39	237	56	102	195	45	65	195	46	1417
6:00 PM	55	373	37	24	261	88	85	170	63	53	162	52	1423
6:15 PM	84	328	43	29	222	58	74	127	55	55	150	34	1259
6:30 PM													
6:45 PM													
TOTAL VOLUMES =	NL 550	NT 2750	NR 359	SL 316	ST 2056	SR 543	EL 712	ET 1417	ER 377	WL 503	WT 1459	WR 407	TOTAL 11449

PM Peak Hr Begins at: 430 PM

PEAK VOLUMES =	273	1405	193	191	1085	290	372	755	167	255	765	219	5970
PEAK HR. FACTOR:		0.945			0.967			0.977			0.930		0.989

CONTROL: Signalized

Counts Unlimited Inc.
25286 Jaclyn Avenue
Moreno Valley, CA 92557
951-485-7934

City of Westminster
N/S: Brookhurst Street
E/W: Bolsa Avenue
Weather: Sunny

File Name : WMBRBOSAT
Site Code : 04132801
Start Date : 9/6/2008
Page No : 2

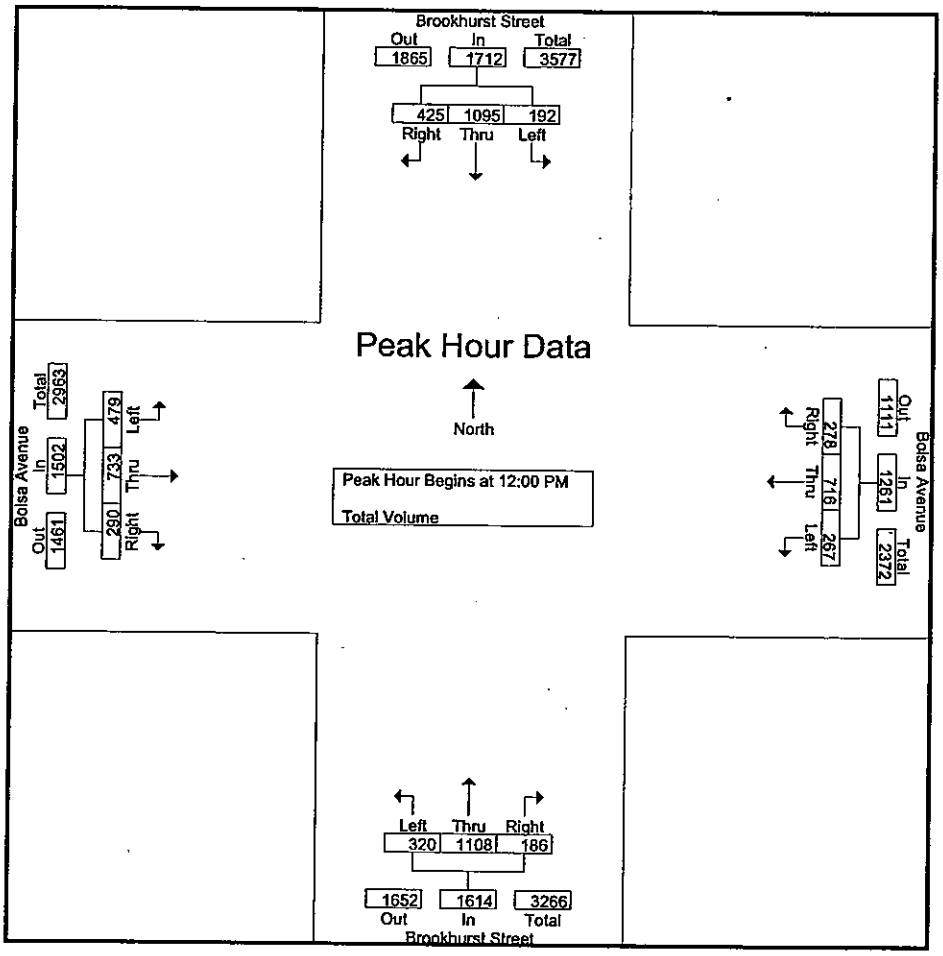

Peak Hour Analysis From 12:00 PM to 01:45 PM - Peak 1 of 1

Peak Hour for Each Approach Begins at:

	12:30 PM				12:30 PM				12:00 PM				12:00 PM			
+0 mins.	35	326	88	449	64	173	72	309	77	286	45	408	122	196	61	379
+15 mins.	39	252	112	403	70	190	67	327	86	281	45	412	118	195	81	394
+30 mins.	62	284	90	436	49	175	67	291	85	295	52	432	109	185	63	357
+45 mins.	40	306	108	454	71	191	81	343	72	246	44	362	130	157	85	372
Total Volume	176	1168	398	1742	254	729	287	1270	320	1108	186	1614	479	733	290	1502
% App. Total	10.1	67	22.8		20	57.4	22.6		19.8	68.6	11.5		31.9	48.8	19.3	
PHF	.710	.896	.888	.959	.894	.954	.886	.926	.930	.939	.894	.934	.921	.935	.853	.953

Counts Unlimited Inc.
25286 Jaclyn Avenue
Moreno Valley, CA 92557
951-485-7934

City of Westminster
N/S: Brookhurst Street
E/W: Bolsa Avenue
Weather: Sunny

File Name : WMBRBOSAT
Site Code : 04132801
Start Date : 9/6/2008
Page No : 1

Groups Printed- Total Volume

	Brookhurst Street Southbound				Bolsa Avenue Westbound				Brookhurst Street Northbound				Bolsa Avenue Eastbound				
Start Time	Left	Thru	Right	App. Total	Left	Thru	Right	App. Total	Left	Thru	Right	App. Total	Left	Thru	Right	App. Total	Int. Total
12:00 PM	58	280	100	438	61	172	66	299	77	286	45	408	122	196	61	379	1524
12:15 PM	60	237	125	422	72	181	73	326	86	281	45	412	118	195	81	394	1554
12:30 PM	35	326	88	449	64	173	72	309	85	295	52	432	109	185	63	357	1547
12:45 PM	39	252	112	403	70	190	67	327	72	246	44	362	130	157	85	372	1464
Total	192	1095	425	1712	267	716	278	1261	320	1108	186	1614	479	733	290	1502	6089
01:00 PM	62	284	90	436	49	175	67	291	80	230	46	356	118	173	71	362	1445
01:15 PM	40	306	108	454	71	191	81	343	85	265	55	405	102	166	77	345	1547
01:30 PM	52	248	108	408	65	152	70	287	87	228	43	358	111	159	58	328	1381
01:45 PM	43	278	107	428	57	181	66	304	68	262	40	370	121	166	50	337	1439
Total	197	1116	413	1726	242	699	284	1225	320	985	184	1489	452	664	256	1372	5812
Grand Total	389	2211	838	3438	509	1415	562	2486	640	2093	370	3103	931	1397	546	2874	11901
Apprch %	11.3	64.3	24.4		20.5	56.9	22.6		20.6	67.5	11.9		32.4	48.6	19		
Total %	3.3	18.6	7	28.9	4.3	11.9	4.7	20.9	5.4	17.6	3.1	26.1	7.8	11.7	4.6	24.1	

	Brookhurst Street Southbound				Bolsa Avenue Westbound				Brookhurst Street Northbound				Bolsa Avenue Eastbound				
Start Time	Left	Thru	Right	App. Total	Left	Thru	Right	App. Total	Left	Thru	Right	App. Total	Left	Thru	Right	App. Total	Int. Total
Peak Hour Analysis From 12:00 PM to 01:45 PM - Peak 1 of 1																	
Peak Hour for Entire Intersection Begins at 12:00 PM																	
12:00 PM	58	280	100	438	61	172	66	299	77	286	45	408	122	196	61	379	1524
12:15 PM	60	237	125	422	72	181	73	326	86	281	45	412	118	195	81	394	1554
12:30 PM	35	326	88	449	64	173	72	309	85	295	52	432	109	185	63	357	1547
12:45 PM	39	252	112	403	70	190	67	327	72	246	44	362	130	157	85	372	1464
Total Volume	192	1095	425	1712	267	716	278	1261	320	1108	186	1614	479	733	290	1502	6089
% App. Total	11.2	64	24.8		21.2	56.8	22		19.8	68.6	11.5		31.9	48.8	19.3		
PHF	.800	.840	.850	.953	.927	.942	.952	.964	.930	.939	.894	.934	.921	.935	.853	.953	.980

Intersection Turning Movement

Prepared by:

National Data & Surveying Services

N-S STREET: Brookhurst St | DATE: 11/14/2007 | LOCATION: City of Westminster

E-W STREET: Bolsa Ave | DAY: WEDNESDAY | PROJECT# 07-1311-046

	NORTHBOUND			SOUTHBOUND			EASTBOUND			WESTBOUND			
	NL	NT	NR	SL	ST	SR	EL	ET	ER	WL	WT	WR	TOTAL
LANES:	2	3	0	2	2.5	1.5	2	2.5	0.5	2	3	1	
10:00 AM													
10:15 AM													
10:30 AM													
10:45 AM													
11:00 AM													
11:15 AM													
11:30 AM													
11:45 AM													
12:00 PM	84	177	40	39	245	97	96	155	53	57	140	35	1218
12:15 PM	79	185	32	35	215	88	98	146	70	56	170	57	1231
12:30 PM	72	185	40	40	248	95	105	152	51	49	128	57	1222
12:45 PM	76	202	32	35	250	81	95	137	68	60	129	53	1218
1:00 PM	72	201	42	41	214	108	90	147	74	31	145	41	1206
1:15 PM	63	191	41	37	241	96	108	164	55	50	138	41	1225
1:30 PM	58	178	38	36	248	64	103	160	63	48	159	65	1220
1:45 PM	69	204	32	40	270	90	97	142	51	45	127	39	1206
2:00 PM													
2:15 PM													
2:30 PM													
2:45 PM													
3:00 PM													
3:15 PM													
3:30 PM													
3:45 PM													
4:00 PM													
4:15 PM													
4:30 PM													
4:45 PM													
TOTAL VOLUMES =	NL 573	NT 1523	NR 297	SL 303	ST 1931	SR 719	EL 792	ET 1203	ER 485	WL 396	WT 1136	WR 388	TOTAL 9746

NOON Peak Hr Begins at: 1200 PM

PEAK VOLUMES =	311	749	144	149	958	361	394	590	242	222	567	202	4889
PEAK HR. FACTOR:		0.971			0.958			0.976			0.875		0.993

CONTROL: Signalized

Intersection Turning Movement

Prepared by:

NDS

National Data & Surveying Services

TMC Summary of Brookhurst St/Bishop Place

Project #: 07-1311-061

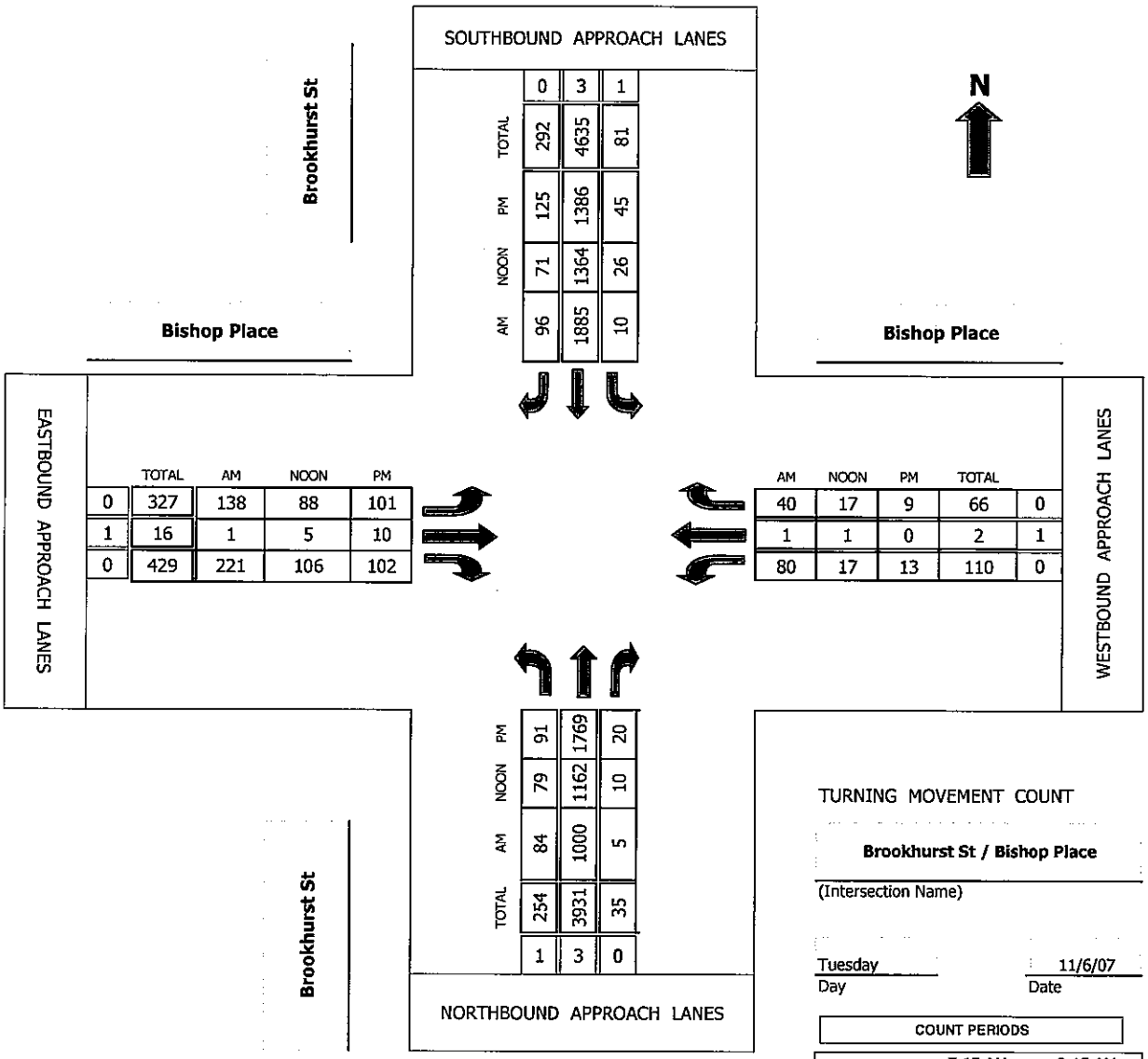

	TOTAL	AM	NOON	PM
0	292	96	71	125
3	4635	1885	1364	1386
1	81	10	26	45

	TOTAL	AM	NOON	PM
0	327	138	88	101
1	16	1	5	10
0	429	221	106	102

	AM	NOON	PM	TOTAL
40	17	9	66	0
1	1	0	2	1
80	17	13	110	0

	TOTAL	AM	NOON	PM
91	254	84	79	91
1769	3931	1000	1162	1769
20	35	5	10	20
1	3	0		

TURNING MOVEMENT COUNT

Brookhurst St / Bishop Place

(Intersection Name)

Tuesday — Day

11/6/07 — Date

COUNT PERIODS		
am	7:15 AM -	9:15 AM
noon	12:00 PM -	2:00 PM
pm	4:30 PM -	6:30 PM

AM PEAK HOUR	715 AM
NOON PEAK HOUR	1230 PM
PM PEAK HOUR	445 PM

Intersection Turning Movement

Prepared by:

National Data & Surveying Services

N-S STREET: Brookhurst St DATE: 11/6/2007 LOCATION: City of Westminster

E-W STREET: Bishop Place DAY: TUESDAY PROJECT# 07-1311-061

	NORTHBOUND			SOUTHBOUND			EASTBOUND			WESTBOUND			
	NL	NT	NR	SL	ST	SR	EL	ET	ER	WL	WT	WR	TOTAL
LANES:	1	3	0	1	3	0	1	1	0	0	1	0	
6:00 AM													
6:15 AM													
6:30 AM													
6:45 AM													
7:00 AM													
7:15 AM	14	242	1	1	498	14	23	0	38	15	1	7	854
7:30 AM	24	234	1	2	507	28	34	0	55	16	0	11	912
7:45 AM	28	277	2	3	490	25	43	0	69	26	0	13	976
8:00 AM	18	247	1	4	390	29	38	1	59	23	0	9	819
8:15 AM	9	258	2	3	380	23	33	0	34	15	1	7	765
8:30 AM	8	251	2	3	411	17	23	1	24	7	0	5	752
8:45 AM	15	218	3	3	362	12	10	0	22	10	0	2	657
9:00 AM	13	214	2	2	277	15	12	0	25	13	0	4	577
9:15 AM													
9:30 AM													
9:45 AM													
10:00 AM													
10:15 AM													
10:30 AM													
10:45 AM													
11:00 AM													
11:15 AM													
11:30 AM													
11:45 AM													
TOTAL VOLUMES =	NL 129	NT 1941	NR 14	SL 21	ST 3315	SR 163	EL 216	ET 2	ER 326	WL 125	WT 2	WR 58	TOTAL 6312

AM Peak Hr Begins at: 715 AM

PEAK VOLUMES =	84	1000	5	10	1885	96	138	1	221	80	1	40	3561
PEAK HR. FACTOR:		0.887			0.927			0.804			0.776		0.912

CONTROL: Signalized

Intersection Turning Movement

Prepared by:

National Data & Surveying Services

N-S STREET: Brookhurst St DATE: 11/6/2007 LOCATION: City of Westminster

E-W STREET: Bishop Place DAY: TUESDAY PROJECT# 07-1311-061

	NORTHBOUND			SOUTHBOUND			EASTBOUND			WESTBOUND			
	NL	NT	NR	SL	ST	SR	EL	ET	ER	WL	WT	WR	TOTAL
LANES:	1	3	0	1	3	0	1	1	0	0	1	0	
1:00 PM													
1:15 PM													
1:30 PM													
1:45 PM													
2:00 PM													
2:15 PM													
2:30 PM													
2:45 PM													
3:00 PM													
3:15 PM													
3:30 PM													
3:45 PM													
4:00 PM													
4:15 PM													
4:30 PM	31	449	3	2	270	29	25	0	40	2	0	3	854
4:45 PM	23	442	3	10	345	27	15	1	40	2	0	4	912
5:00 PM	25	424	5	11	352	28	24	1	29	3	0	2	904
5:15 PM	20	434	3	12	361	30	27	4	11	3	0	1	906
5:30 PM	23	469	9	12	328	40	35	4	22	5	0	2	949
5:45 PM	20	439	6	11	323	29	27	2	20	3	1	3	884
6:00 PM	22	423	5	9	317	25	22	0	19	2	0	2	846
6:15 PM	23	341	4	11	311	17	15	0	17	1	0	3	743
6:30 PM													
6:45 PM													
TOTAL VOLUMES =	NL 187	NT 3421	NR 38	SL 78	ST 2607	SR 225	EL 190	ET 12	ER 198	WL 21	WT 1	WR 20	TOTAL 6998

PM Peak Hr Begins at: 445 PM

PEAK VOLUMES =	91	1769	20	45	1386	125	101	10	102	13	0	9	3671
PEAK HR. FACTOR:		0.938			0.965			0.873			0.786		0.967

CONTROL: Signalized

Intersection Turning Movement

Prepared by:

National Data & Surveying Services

N-S STREET: Brookhurst St DATE: 11/6/2007 LOCATION: City of Westminster

E-W STREET: Bishop Place DAY: TUESDAY PROJECT# 07-1311-061

	NORTHBOUND			SOUTHBOUND			EASTBOUND			WESTBOUND			
LANES:	NL 1	NT 3	NR 0	SL 1	ST 3	SR 0	EL 1	ET 1	ER 0	WL 0	WT 1	WR 0	TOTAL
10:00 AM													
10:15 AM													
10:30 AM													
10:45 AM													
11:00 AM													
11:15 AM													
11:30 AM													
11:45 AM													
12:00 PM	22	250	2	3	318	17	14	0	18	2	1	5	652
12:15 PM	20	243	2	2	304	15	11	0	14	1	0	2	614
12:30 PM	24	286	3	2	338	20	16	0	19	2	0	1	711
12:45 PM	20	290	2	6	332	18	26	1	28	4	0	4	731
1:00 PM	16	291	3	9	327	17	34	2	32	7	1	10	749
1:15 PM	19	295	2	9	367	16	12	2	27	4	0	2	755
1:30 PM	20	272	1	4	340	19	15	0	25	2	0	4	702
1:45 PM	21	247	2	0	305	21	18	0	22	1	1	8	646
2:00 PM													
2:15 PM													
2:30 PM													
2:45 PM													
3:00 PM													
3:15 PM													
3:30 PM													
3:45 PM													
4:00 PM													
4:15 PM													
4:30 PM													
4:45 PM													
TOTAL VOLUMES =	NL 162	NT 2174	NR 17	SL 35	ST 2631	SR 143	EL 146	ET 5	ER 185	WL 23	WT 3	WR 36	TOTAL 5560

NOON Peak Hr Begins at: 1230 PM

PEAK VOLUMES =	79	1162	10	26	1364	71	88	5	106	17	1	17	2946
PEAK HR. FACTOR:		0.990			0.932			0.732			0.486		0.975

CONTROL: Signalized

TRAFFIC DATA SERVICES, INC.
(714) 541-2228
Summary of Vehicular Turning Movements

N/S ST : BROOKHURST ST
E/W ST: BISHOP PL/DRIVEWAY
CITY: WESTMINSTER

FILENAME: 0980204N
DATE: 9/6/2008
DAY: SATURDAY

	NORTHBOUND			SOUTHBOUND			EASTBOUND			WESTBOUND			
	NL	NT	NR	SL	ST	SR	EL	ET	ER	WL	WT	WR	Total
LANES:	1	3	0	1	3	0	1	1	0	0	1	0	
10:00 AM													
15 AM													
30 AM													
45 AM													
11:00 AM													
15 AM													
30 AM													
45 AM													
12:00 PM	34	367	6	2	406	26	25	1	32	5	1	2	907
15 PM	12	334	2	2	371	25	15	1	32	0	0	6	800
30 PM	23	361	4	4	383	26	30	0	30	4	1	3	869
45 PM	28	324	4	5	346	31	18	0	33	0	0	0	789
1:00 PM	22	312	4	2	340	18	16	0	32	3	0	2	751
15 PM	20	357	5	3	437	31	19	0	29	2	2	2	907
30 PM	20	300	5	21	343	24	22	0	19	2	0	1	757
45 PM	23	329	3	3	324	12	16	0	26	4	1	3	744
2:00 PM													
15 PM													
30 PM													
45 PM													

PEAK HOUR BEGINS AT: 1200 PM

PHF: 0.93

VOLUMES =	97	1386	16	13	1506	108	88	2	127	9	2	11	3365

COMMENTS:

TRAFFIC DATA SERVICES, INC.
(714) 541-2228
Summary of Vehicular Turning Movements

N/S ST : BROOKHURST ST
E/W ST: BISHOP PL/DRIVEWAY
CITY: WESTMINSTER

FILENAME: 0980204N
DATE: 9/6/2008
DAY: SATURDAY

	NORTHBOUND			SOUTHBOUND			EASTBOUND			WESTBOUND			
	NL	NT	NR	SL	ST	SR	EL	ET	ER	WL	WT	WR	Total
LANES:	1	3	0	1	3	0	1	1	0	0	1	0	
10:00 AM													
15 AM													
30 AM													
45 AM													
11:00 AM													
15 AM													
30 AM													
45 AM													
12:00 PM	34	367	6	2	406	26	25	1	32	5	1	2	907
15 PM	12	334	2	2	371	25	15	1	32	0	0	6	800
30 PM	23	361	4	4	383	26	30	0	30	4	1	3	869
45 PM	28	324	4	5	346	31	18	0	33	0	0	0	789
1:00 PM	22	312	4	2	340	18	16	0	32	3	0	2	751
15 PM	20	357	5	3	437	31	19	0	29	2	2	2	907
30 PM	20	300	5	21	343	24	22	0	19	2	0	1	757
45 PM	23	329	3	3	324	12	16	0	26	4	1	3	744
2:00 PM													
15 PM													
30 PM													
45 PM													

PEAK HOUR BEGINS AT:
1200 PM

PHF: 0.93

VOLUMES =	97	1386	16	13	1506	108	88	2	127	9	2	11	3365

COMMENTS:

Intersection Turning Movement

Prepared by:

National Data & Surveying Services

N-S STREET: Brookhurst St DATE: 11/6/2007 LOCATION: City of Westminster

E-W STREET: McFadden Ave DAY: TUESDAY PROJECT# 07-1311-062

	NORTHBOUND			SOUTHBOUND			EASTBOUND			WESTBOUND			
	NL	NT	NR	SL	ST	SR	EL	ET	ER	WL	WT	WR	TOTAL
LANES:	1	3	0	1	3	1	1	2	0	1	2	0	
6:00 AM													
6:15 AM													
6:30 AM													
6:45 AM													
7:00 AM													
7:15 AM	21	216	20	39	492	46	29	181	57	48	142	41	1332
7:30 AM	19	237	24	42	470	48	37	172	59	53	152	37	1350
7:45 AM	39	226	19	72	477	45	31	185	49	54	174	44	1415
8:00 AM	33	199	12	46	404	31	23	156	41	27	141	27	1140
8:15 AM	17	219	8	37	425	30	22	125	51	34	107	17	1092
8:30 AM	12	200	13	25	335	27	24	103	44	30	94	22	929
8:45 AM	26	179	15	27	300	21	17	97	49	29	92	20	872
9:00 AM	24	191	15	27	301	36	21	92	28	23	128	15	901
9:15 AM													
9:30 AM													
9:45 AM													
10:00 AM													
10:15 AM													
10:30 AM													
10:45 AM													
11:00 AM													
11:15 AM													
11:30 AM													
11:45 AM													
TOTAL VOLUMES =	NL 191	NT 1667	NR 126	SL 315	ST 3204	SR 284	EL 204	ET 1111	ER 378	WL 298	WT 1030	WR 223	TOTAL 9031

AM Peak Hr Begins at: 715 AM

PEAK VOLUMES =	112	878	75	199	1843	170	120	694	206	182	609	149	5237
PEAK HR. FACTOR:		0.938			0.931			0.951			0.864		0.925

CONTROL: Signalized

Intersection Turning Movement

Prepared by:

National Data & Surveying Services

N-S STREET: Brookhurst St | DATE: 11/6/2007 | LOCATION: City of Westminster

E-W STREET: McFadden Ave | DAY: TUESDAY | PROJECT# 07-1311-062

	NORTHBOUND			SOUTHBOUND			EASTBOUND			WESTBOUND			
	NL	NT	NR	SL	ST	SR	EL	ET	ER	WL	WT	WR	TOTAL
LANES:	1	3	0	1	3	1	1	2	0	1	2	0	
10:00 AM													
10:15 AM													
10:30 AM													
10:45 AM													
11:00 AM													
11:15 AM													
11:30 AM													
11:45 AM													
12:00 PM	37	285	28	29	252	32	26	62	49	30	90	31	951
12:15 PM	37	317	29	31	283	30	26	66	49	39	117	31	1055
12:30 PM	54	310	32	40	308	59	17	79	40	21	81	18	1059
12:45 PM	43	239	18	35	241	35	18	99	52	24	85	33	922
1:00 PM	56	244	23	40	253	38	34	73	44	27	76	32	940
1:15 PM	38	242	16	38	297	52	15	68	26	20	91	19	922
1:30 PM	49	169	16	31	270	41	16	70	32	34	88	23	839
1:45 PM	56	176	28	58	306	25	13	77	24	21	90	32	906
2:00 PM													
2:15 PM													
2:30 PM													
2:45 PM													
3:00 PM													
3:15 PM													
3:30 PM													
3:45 PM													
4:00 PM													
4:15 PM													
4:30 PM													
4:45 PM													
TOTAL VOLUMES =	NL 370	NT 1982	NR 190	SL 302	ST 2210	SR 312	EL 165	ET 594	ER 316	WL 216	WT 718	WR 219	TOTAL 7594

NOON Peak Hr Begins at: 1200 PM

PEAK VOLUMES =	171	1151	107	135	1084	156	87	306	190	114	373	113	3987
PEAK HR. FACTOR:		0.902			0.845			0.862			0.802		0.941

CONTROL: Signalized

Intersection Turning Movement

Prepared by:

National Data & Surveying Services

N-S STREET: Brookhurst St | DATE: 11/6/2007 | LOCATION: City of Westminster

E-W STREET: McFadden Ave | DAY: TUESDAY | PROJECT# 07-1311-062

	NORTHBOUND			SOUTHBOUND			EASTBOUND			WESTBOUND			
	NL	NT	NR	SL	ST	SR	EL	ET	ER	WL	WT	WR	TOTAL
LANES:	1	3	0	1	3	1	1	2	0	1	2	0	
1:00 PM													
1:15 PM													
1:30 PM													
1:45 PM													
2:00 PM													
2:15 PM													
2:30 PM													
2:45 PM													
3:00 PM													
3:15 PM													
3:30 PM													
3:45 PM													
4:00 PM													
4:15 PM													
4:30 PM	62	378	20	34	268	39	40	127	26	21	184	36	1235
4:45 PM	88	367	19	39	299	25	53	96	44	29	165	41	1265
5:00 PM	69	365	14	40	248	34	46	60	34	22	158	40	1130
5:15 PM	66	384	14	42	308	39	43	70	45	32	162	33	1238
5:30 PM	93	454	14	67	305	30	47	85	50	56	188	37	1426
5:45 PM	58	394	15	53	243	25	40	71	52	24	145	35	1155
6:00 PM	66	399	20	38	267	46	30	86	31	29	144	30	1186
6:15 PM	77	350	19	36	285	26	14	104	23	23	147	19	1123
6:30 PM													
6:45 PM													
TOTAL VOLUMES =	NL 579	NT 3091	NR 135	SL 349	ST 2223	SR 264	EL 313	ET 699	ER 305	WL 236	WT 1293	WR 271	TOTAL 9758

PM Peak Hr Begins at: 445 PM

PEAK VOLUMES =	316	1570	61	188	1160	128	189	311	173	139	673	151	5059
PEAK HR. FACTOR:		0.868			0.918			0.872			0.857		0.887

CONTROL: Signalized

TRAFFIC DATA SERVICES, INC.
(714) 541-2228
Summary of Vehicular Turning Movements

N/S ST : BROOKHURST ST
E/W ST: MCFADDEN AVE
CITY: WESTMINSTER

FILENAME: 0980209B
DATE: 9/13/2008
DAY: SATURDAY

	NORTHBOUND			SOUTHBOUND			EASTBOUND			WESTBOUND			
	NL	NT	NR	SL	ST	SR	EL	ET	ER	WL	WT	WR	Total
LANES:	1	3	0	1	3	1	1	2	0	1	2	0	
10:00 AM													
15 AM													
30 AM													
45 AM													
11:00 AM													
15 AM													
30 AM													
45 AM													
12:00 PM	56	339	13	57	342	36	37	116	52	31	130	29	1238
15 PM	62	300	23	61	320	38	35	131	33	37	135	35	1210
30 PM	70	320	28	64	325	33	30	115	41	40	128	38	1232
45 PM	62	328	30	52	284	27	31	138	49	38	132	40	1211
1:00 PM	60	340	38	60	325	37	35	133	41	42	135	40	1286
15 PM	48	300	19	51	330	35	27	115	23	30	128	32	1138
30 PM	47	298	22	40	349	30	30	114	41	31	126	27	1155
45 PM	42	296	20	51	332	51	23	102	28	33	128	23	1129
2:00 PM													
15 PM													
30 PM													
45 PM													

PEAK HOUR BEGINS AT:
1215 PM

PHF: 0.96

VOLUMES =	254	1288	119	237	1254	135	131	517	164	157	530	153	4939

COMMENTS:

Volumes for: Sunday, October 14, 2007 City: Westminster Project #: 07-1280-052

Location: Newland St btwn McFadden Ave & Bolsa Ave

AM Period	NB		SB		EB	WB		PM Period	NB		SB		EB	WB	
00:00	22		21					12:00	108		159				
00:15	27		23					12:15	113		118				
00:30	13		19					12:30	112		127				
00:45	16	78	17	80			158	12:45	94	427	158	562			989
01:00	16		15					13:00	96		116				
01:15	13		20					13:15	128		132				
01:30	15		16					13:30	136		128				
01:45	9	53	20	71			124	13:45	92	452	118	494			946
02:00	11		12					14:00	95		117				
02:15	14		8					14:15	114		119				
02:30	6		17					14:30	122		118				
02:45	4	35	4	41			76	14:45	108	439	104	458			897
03:00	9		8					15:00	117		155				
03:15	6		11					15:15	95		103				
03:30	3		8					15:30	88		98				
03:45	0	18	5	32			50	15:45	100	400	100	456			856
04:00	1		6					16:00	109		86				
04:15	6		6					16:15	115		118				
04:30	3		10					16:30	97		95				
04:45	9	19	4	26			45	16:45	96	417	106	405			822
05:00	2		5					17:00	117		103				
05:15	11		13					17:15	83		120				
05:30	14		19					17:30	92		104				
05:45	6	33	20	57			90	17:45	104	396	88	415			811
06:00	9		19					18:00	95		100				
06:15	8		18					18:15	122		117				
06:30	7		19					18:30	88		86				
06:45	14	38	25	81			119	18:45	87	392	106	409			801
07:00	23		21					19:00	70		84				
07:15	15		28					19:15	75		67				
07:30	22		42					19:30	54		46				
07:45	28	88	49	140			228	19:45	73	272	65	262			534
08:00	42		48					20:00	71		65				
08:15	59		56					20:15	58		69				
08:30	42		84					20:30	50		58				
08:45	60	203	83	271			474	20:45	40	219	39	231			450
09:00	94		82					21:00	47		37				
09:15	97		92					21:15	29		52				
09:30	84		141					21:30	40		60				
09:45	88	363	116	431			794	21:45	33	149	40	189			338
10:00	85		99					22:00	30		32				
10:15	126		105					22:15	34		31				
10:30	95		105					22:30	23		24				
10:45	87	393	101	410			803	22:45	22	109	15	102			211
11:00	90		108					23:00	30		23				
11:15	120		128					23:15	18		13				
11:30	118		127					23:30	14		14				
11:45	112	440	110	473			913	23:45	13	75	10	60			135
Total Vol.		1761		2113			**3874**			3747		4043			**7790**

Daily Totals

NB	SB	EB	WB	Combined
5508	6156			**11664**

	AM			PM		
Split %	45.5%	54.5%	**33.2%**	48.1%	51.9%	**66.8%**
Peak Hour	11:15	11:15	**11:15**	14:15	12:00	**12:00**
Volume	458	524	**982**	461	562	**989**
P.H.F.	0.95	0.82	**0.92**	0.93	0.88	**0.93**

Volumes for: Monday, October 15, 2007 City: Westminster Project #: 07-1280-052

Location: Newland St btwn McFadden Ave & Bolsa Ave

AM Period	NB		SB		EB	WB		PM Period	NB		SB		EB	WB	
00:00	8		14					12:00	77		125				
00:15	19		5					12:15	95		110				
00:30	7		10					12:30	114		100				
00:45	10	44	4	33			77	12:45	104	390	103	438			828
01:00	7		14					13:00	78		117				
01:15	4		5					13:15	84		94				
01:30	3		3					13:30	79		93				
01:45	5	19	5	27			46	13:45	95	336	114	418			754
02:00	2		3					14:00	99		97				
02:15	3		4					14:15	115		120				
02:30	3		6					14:30	96		138				
02:45	0	8	9	22			30	14:45	128	438	116	471			909
03:00	4		6					15:00	146		141				
03:15	1		4					15:15	154		128				
03:30	1		4					15:30	167		127				
03:45	1	7	8	22			29	15:45	151	618	142	538			1156
04:00	6		11					16:00	174		150				
04:15	10		14					16:15	155		143				
04:30	13		25					16:30	199		161				
04:45	22	51	20	70			121	16:45	187	715	127	581			1296
05:00	6		27					17:00	212		162				
05:15	11		51					17:15	208		173				
05:30	18		64					17:30	197		146				
05:45	17	52	55	197			249	17:45	209	826	151	632			1458
06:00	27		57					18:00	182		157				
06:15	29		103					18:15	160		96				
06:30	48		147					18:30	139		117				
06:45	65	169	122	429			598	18:45	119	600	84	454			1054
07:00	66		178					19:00	101		85				
07:15	85		218					19:15	76		81				
07:30	85		244					19:30	60		65				
07:45	107	343	194	834			1177	19:45	78	315	63	294			609
08:00	103		196					20:00	73		58				
08:15	70		186					20:15	57		57				
08:30	114		168					20:30	53		44				
08:45	78	365	152	702			1067	20:45	57	240	49	208			448
09:00	75		136					21:00	57		45				
09:15	64		120					21:15	42		53				
09:30	87		113					21:30	51		34				
09:45	70	296	94	463			759	21:45	42	192	27	159			351
10:00	83		84					22:00	50		37				
10:15	76		104					22:15	35		18				
10:30	91		107					22:30	28		18				
10:45	71	321	95	390			711	22:45	22	135	26	99			234
11:00	77		92					23:00	26		12				
11:15	78		96					23:15	20		19				
11:30	73		116					23:30	19		10				
11:45	92	320	108	412			732	23:45	17	82	9	50			132
Total Vol.		1995		3601			**5596**			4887		4342			**9229**

Daily Totals

	NB	SB	EB	WB	Combined
	6882	7943			**14825**

	AM			PM		
Split %	35.7%	64.3%	**37.7%**	53.0%	47.0%	**62.3%**
Peak Hour	07:45	07:15	**07:15**	17:00	17:00	**17:00**
Volume	394	852	**1232**	826	632	**1458**
P.H.F.	0.86	0.87	**0.94**	0.96	0.91	**0.96**

Volumes for: Tuesday, October 16, 2007 City: Westminster Project #: 07-1280-052

Location: Newland St btwn McFadden Ave & Bolsa Ave

AM Period	NB		SB		EB	WB		PM Period	NB		SB		EB	WB	
00:00	16		22					12:00	98		93				
00:15	8		7					12:15	81		110				
00:30	9		9					12:30	101		99				
00:45	9	42	5	43			85	12:45	104	384	99	401			785
01:00	6		10					13:00	93		84				
01:15	10		2					13:15	102		94				
01:30	7		3					13:30	82		88				
01:45	2	25	2	17			42	13:45	89	366	108	374			740
02:00	4		6					14:00	93		99				
02:15	3		6					14:15	101		114				
02:30	3		7					14:30	132		150				
02:45	2	12	6	25			37	14:45	150	476	152	515			991
03:00	3		4					15:00	142		114				
03:15	3		10					15:15	176		127				
03:30	4		5					15:30	135		116				
03:45	3	13	8	27			40	15:45	186	639	117	474			1113
04:00	3		6					16:00	153		122				
04:15	12		20					16:15	171		150				
04:30	14		32					16:30	200		140				
04:45	19	48	21	79			127	16:45	193	717	132	544			1261
05:00	11		40					17:00	233		156				
05:15	15		43					17:15	204		161				
05:30	21		75					17:30	179		168				
05:45	16	63	62	220			283	17:45	222	838	151	636			1474
06:00	30		66					18:00	177		155				
06:15	28		86					18:15	197		140				
06:30	60		152					18:30	135		125				
06:45	57	175	140	444			619	18:45	114	623	115	535			1158
07:00	69		180					19:00	114		89				
07:15	89		237					19:15	104		97				
07:30	92		266					19:30	74		57				
07:45	97	347	222	905			1252	19:45	72	364	60	303			667
08:00	79		227					20:00	78		61				
08:15	104		166					20:15	73		60				
08:30	77		180					20:30	55		66				
08:45	100	360	143	716			1076	20:45	69	275	53	240			515
09:00	73		131					21:00	56		41				
09:15	85		119					21:15	46		50				
09:30	72		111					21:30	48		46				
09:45	79	309	105	466			775	21:45	49	199	31	168			367
10:00	70		85					22:00	47		30				
10:15	71		103					22:15	45		37				
10:30	75		117					22:30	35		26				
10:45	68	284	67	372			656	22:45	27	154	27	120			274
11:00	89		76					23:00	16		16				
11:15	86		76					23:15	20		13				
11:30	70		113					23:30	18		16				
11:45	87	332	90	355			687	23:45	12	66	8	53			119
Total Vol.		2010		3669			**5679**			5101		4363			**9464**

Daily Totals

	NB	SB	EB	WB	Combined
	7111	8032			**15143**

	AM			PM		
Split %	35.4%	64.6%	**37.5%**	53.9%	46.1%	**62.5%**
Peak Hour	07:30	07:15	**07:15**	17:00	17:00	**17:00**
Volume	372	952	**1309**	838	636	**1474**
P.H.F.	0.89	0.89	**0.91**	0.85	0.95	**0.95**

Volumes for: Wednesday, October 17, 2007 City: Westminster Project #: 07-1280-052

Location: Newland St btwn McFadden Ave & Bolsa Ave

AM Period	NB		SB		EB	WB		PM Period	NB		SB		EB	WB	
00:00	13		12					12:00	107		118				
00:15	10		15					12:15	104		87				
00:30	11		7					12:30	92		88				
00:45	3	37	9	43			80	12:45	75	378	86	379			757
01:00	5		7					13:00	94		82				
01:15	4		4					13:15	93		84				
01:30	3		6					13:30	89		109				
01:45	5	17	6	23			40	13:45	102	378	94	369			747
02:00	5		4					14:00	91		126				
02:15	3		2					14:15	105		130				
02:30	5		3					14:30	107		129				
02:45	4	17	7	16			33	14:45	121	424	114	499			923
03:00	1		6					15:00	139		128				
03:15	1		4					15:15	161		112				
03:30	3		4					15:30	157		125				
03:45	1	6	6	20			26	15:45	155	612	120	485			1097
04:00	5		9					16:00	213		127				
04:15	9		18					16:15	178		125				
04:30	9		30					16:30	198		150				
04:45	7	30	24	81			111	16:45	186	775	155	557			1332
05:00	13		30					17:00	212		140				
05:15	18		67					17:15	217		189				
05:30	32		68					17:30	189		157				
05:45	23	86	52	217			303	17:45	208	826	149	635			1461
06:00	39		75					18:00	183		167				
06:15	28		90					18:15	183		143				
06:30	47		157					18:30	162		113				
06:45	59	173	130	452			625	18:45	156	684	99	522			1206
07:00	89		177					19:00	128		106				
07:15	100		240					19:15	103		59				
07:30	104		268					19:30	83		72				
07:45	117	410	227	912			1322	19:45	84	398	72	309			707
08:00	78		201					20:00	86		70				
08:15	102		182					20:15	60		58				
08:30	109		194					20:30	57		88				
08:45	60	349	164	741			1090	20:45	51	254	41	257			511
09:00	78		153					21:00	72		64				
09:15	81		103					21:15	48		50				
09:30	87		103					21:30	47		40				
09:45	75	321	112	471			792	21:45	39	206	42	196			402
10:00	72		86					22:00	47		43				
10:15	82		95					22:15	31		35				
10:30	67		69					22:30	30		26				
10:45	95	316	89	339			655	22:45	30	138	14	118			256
11:00	97		93					23:00	24		17				
11:15	78		90					23:15	25		15				
11:30	76		108					23:30	10		22				
11:45	93	344	104	395			739	23:45	16	75	14	68			143
Total Vol.		2106		3710			**5816**			5148		4394			**9542**

Daily Totals

NB	SB	EB	WB	Combined
7254	8104			**15358**

	AM			PM		
Split %	36.2%	63.8%	**37.9%**	54.0%	46.0%	**62.1%**
Peak Hour	07:00	07:15	**07:15**	17:00	17:15	**17:00**
Volume	410	936	**1335**	826	662	**1461**
P.H.F.	0.88	0.87	**0.90**	0.93	0.88	**0.90**

Volumes for: Thursday, October 18, 2007 City: Westminster Project #: 07-1280-052

Location: Newland St btwn McFadden Ave & Bolsa Ave

AM Period	NB		SB		EB	WB		PM Period	NB		SB		EB	WB	
00:00	20		13					12:00	92		102				
00:15	10		11					12:15	72		98				
00:30	9		10					12:30	110		100				
00:45	10	49	13	47			96	12:45	115	389	99	399			788
01:00	9		12					13:00	97		87				
01:15	6		11					13:15	116		88				
01:30	4		13					13:30	85		94				
01:45	3	22	4	40			62	13:45	109	407	94	363			770
02:00	4		5					14:00	107		122				
02:15	8		4					14:15	104		105				
02:30	3		6					14:30	113		120				
02:45	1	16	7	22			38	14:45	140	464	131	478			942
03:00	1		9					15:00	162		126				
03:15	0		5					15:15	152		128				
03:30	3		4					15:30	170		99				
03:45	5	9	6	24			33	15:45	158	642	129	482			1124
04:00	4		12					16:00	157		125				
04:15	7		20					16:15	172		129				
04:30	10		22					16:30	178		148				
04:45	7	28	21	75			103	16:45	183	690	147	549			1239
05:00	13		30					17:00	238		173				
05:15	18		59					17:15	177		161				
05:30	24		61					17:30	221		162				
05:45	16	71	56	206			277	17:45	210	846	161	657			1503
06:00	27		71					18:00	162		136				
06:15	32		96					18:15	197		121				
06:30	54		151					18:30	127		134				
06:45	49	162	130	448			610	18:45	126	612	128	519			1131
07:00	83		190					19:00	154		77				
07:15	76		223					19:15	99		94				
07:30	88		249					19:30	101		73				
07:45	113	360	233	895			1255	19:45	86	440	82	326			766
08:00	102		208					20:00	94		56				
08:15	88		179					20:15	66		58				
08:30	101		192					20:30	57		61				
08:45	86	377	140	719			1096	20:45	59	276	51	226			502
09:00	74		146					21:00	74		55				
09:15	76		104					21:15	70		56				
09:30	84		104					21:30	32		54				
09:45	78	312	92	446			758	21:45	45	221	37	202			423
10:00	66		98					22:00	48		37				
10:15	88		93					22:15	46		31				
10:30	71		91					22:30	50		28				
10:45	85	310	94	376			686	22:45	34	178	24	120			298
11:00	86		86					23:00	21		15				
11:15	88		84					23:15	17		16				
11:30	85		128					23:30	28		20				
11:45	88	347	92	390			737	23:45	21	87	8	59			146
Total Vol.		2063		3688			**5751**		5252		4380				**9632**

Daily Totals

NB	SB	EB	WB	Combined
7315	8068			**15383**

	AM			PM		
Split %	35.9%	64.1%	**37.4%**	54.5%	45.5%	**62.6%**
Peak Hour	07:45	07:15	**07:15**	17:00	17:00	**17:00**
Volume	404	913	**1292**	846	657	**1503**
P.H.F.	0.89	0.92	**0.93**	0.90	0.95	**0.91**

Volumes for: Friday, October 19, 2007 City: Westminster Project #: 07-1280-052

Location: Newland St btwn McFadden Ave & Bolsa Ave

AM Period	NB		SB		EB	WB		PM Period	NB		SB		EB	WB	
00:00	19		16					12:00	108		83				
00:15	10		14					12:15	94		95				
00:30	10		8					12:30	75		114				
00:45	5	44	15	53			97	12:45	123	400	92	384			784
01:00	7		4					13:00	81		103				
01:15	5		7					13:15	102		91				
01:30	7		9					13:30	100		129				
01:45	6	25	9	29			54	13:45	130	413	116	439			852
02:00	5		7					14:00	121		113				
02:15	10		5					14:15	106		104				
02:30	3		9					14:30	109		149				
02:45	3	21	3	24			45	14:45	141	477	135	501			978
03:00	5		4					15:00	148		116				
03:15	4		9					15:15	164		133				
03:30	3		2					15:30	139		140				
03:45	2	14	6	21			35	15:45	224	675	129	518			1193
04:00	3		11					16:00	186		132				
04:15	11		22					16:15	167		129				
04:30	9		26					16:30	191		144				
04:45	8	31	22	81			112	16:45	197	741	131	536			1277
05:00	15		24					17:00	201		167				
05:15	23		49					17:15	218		162				
05:30	21		71					17:30	200		158				
05:45	21	80	58	202			282	17:45	206	825	149	636			1461
06:00	27		60					18:00	169		168				
06:15	32		86					18:15	210		136				
06:30	40		126					18:30	143		132				
06:45	65	164	130	402			566	18:45	146	668	95	531			1199
07:00	66		177					19:00	156		99				
07:15	90		222					19:15	127		99				
07:30	87		266					19:30	102		62				
07:45	102	345	195	860			1205	19:45	100	485	101	361			846
08:00	107		220					20:00	104		80				
08:15	100		153					20:15	89		74				
08:30	99		176					20:30	67		71				
08:45	84	390	159	708			1098	20:45	64	324	55	280			604
09:00	69		107					21:00	76		66				
09:15	64		132					21:15	57		45				
09:30	81		88					21:30	47		51				
09:45	56	270	115	442			712	21:45	63	243	56	218			461
10:00	83		95					22:00	72		54				
10:15	75		83					22:15	55		58				
10:30	104		93					22:30	44		37				
10:45	83	345	90	361			706	22:45	47	218	27	176			394
11:00	75		96					23:00	34		24				
11:15	73		101					23:15	39		22				
11:30	79		111					23:30	39		25				
11:45	95	322	106	414			736	23:45	45	157	26	97			254
Total Vol.		2051		3597			**5648**			5626		4677			**10303**

Daily Totals

NB	SB	EB	WB	Combined
7677	8274			**15951**

	AM			PM		
Split %	36.3%	63.7%	**35.4%**	54.6%	45.4%	**64.6%**
Peak Hour	07:45	07:15	**07:15**	17:00	17:15	**17:00**
Volume	408	903	**1289**	825	637	**1461**
P.H.F.	0.95	0.85	**0.91**	0.94	0.95	**0.96**

Volumes for: Saturday, October 20, 2007 City: Westminster Project #: 07-1280-052

Location: Newland St btwn McFadden Ave & Bolsa Ave

AM Period	NB		SB		EB	WB		PM Period	NB		SB		EB	WB	
00:00	33		8					12:00	125		133				
00:15	30		19					12:15	149		117				
00:30	18		17					12:30	102		141				
00:45	16	97	16	60			157	12:45	138	514	117	508			1022
01:00	10		23					13:00	101		139				
01:15	16		21					13:15	132		138				
01:30	12		11					13:30	122		128				
01:45	5	43	14	69			112	13:45	105	460	121	526			986
02:00	12		12					14:00	119		120				
02:15	11		14					14:15	105		105				
02:30	9		9					14:30	105		128				
02:45	10	42	14	49			91	14:45	126	455	110	463			918
03:00	14		16					15:00	140		118				
03:15	6		14					15:15	130		124				
03:30	6		5					15:30	109		143				
03:45	4	30	3	38			68	15:45	104	483	110	495			978
04:00	9		9					16:00	111		114				
04:15	7		4					16:15	116		104				
04:30	5		14					16:30	122		104				
04:45	7	28	15	42			70	16:45	112	461	105	427			888
05:00	9		19					17:00	132		134				
05:15	7		22					17:15	102		99				
05:30	14		28					17:30	107		90				
05:45	19	49	25	94			143	17:45	112	453	88	411			864
06:00	8		23					18:00	128		112				
06:15	13		26					18:15	122		103				
06:30	26		52					18:30	98		113				
06:45	21	68	55	156			224	18:45	122	470	82	410			880
07:00	25		42					19:00	110		87				
07:15	33		72					19:15	104		72				
07:30	41		94					19:30	92		77				
07:45	41	140	76	284			424	19:45	87	393	90	326			719
08:00	53		76					20:00	63		78				
08:15	53		110					20:15	58		69				
08:30	72		145					20:30	47		62				
08:45	76	254	124	455			709	20:45	58	226	59	268			494
09:00	91		105					21:00	53		58				
09:15	87		103					21:15	57		60				
09:30	88		135					21:30	47		51				
09:45	88	354	112	455			809	21:45	58	215	49	218			433
10:00	84		117					22:00	45		47				
10:15	93		101					22:15	50		48				
10:30	109		92					22:30	37		41				
10:45	116	402	116	426			828	22:45	40	172	41	177			349
11:00	110		111					23:00	62		31				
11:15	104		107					23:15	50		37				
11:30	134		127					23:30	21		26				
11:45	93	441	119	464			905	23:45	25	158	24	118			276
Total Vol.		1948		2592			**4540**			4460		4347			**8807**

Daily Totals

	NB	SB	EB	WB	Combined
	6408	6939			**13347**

	AM			PM		
Split %	42.9%	57.1%	**34.0%**	50.6%	49.4%	**66.0%**
Peak Hour	11:30	11:45	**11:30**	12:00	12:30	**12:00**
Volume	501	510	**997**	514	535	**1022**
P.H.F.	0.84	0.90	**0.94**	0.80	0.95	**0.96**

Volumes for: Sunday, October 14, 2007 City: Westminster Project #: 07-1280-058

Location: Magnolia S btwn Bolsa Ave & Hazard Ave

AM Period	NB		SB		EB	WB		PM Period	NB		SB		EB	WB	
00:00	32		29					12:00	245		315				
00:15	23		23					12:15	215		219				
00:30	25		47					12:30	220		170				
00:45	30	110	28	127			237	12:45	222	902	207	911			1813
01:00	30		26					13:00	240		166				
01:15	22		40					13:15	252		201				
01:30	25		27					13:30	215		194				
01:45	19	96	23	116			212	13:45	211	918	200	761			1679
02:00	27		40					14:00	146		205				
02:15	27		10					14:15	173		214				
02:30	8		15					14:30	176		233				
02:45	12	74	14	79			153	14:45	225	720	207	859			1579
03:00	13		9					15:00	193		186				
03:15	5		11					15:15	158		141				
03:30	8		11					15:30	205		170				
03:45	9	35	10	41			76	15:45	181	737	154	651			1388
04:00	2		5					16:00	188		160				
04:15	8		6					16:15	170		160				
04:30	6		11					16:30	181		168				
04:45	11	27	12	34			61	16:45	159	698	190	678			1376
05:00	11		9					17:00	180		205				
05:15	9		10					17:15	205		173				
05:30	5		18					17:30	176		190				
05:45	16	41	18	55			96	17:45	173	734	164	732			1466
06:00	22		18					18:00	165		149				
06:15	22		30					18:15	190		140				
06:30	30		24					18:30	179		190				
06:45	29	103	26	98			201	18:45	152	686	197	676			1362
07:00	42		31					19:00	163		187				
07:15	40		59					19:15	110		144				
07:30	69		61					19:30	113		148				
07:45	109	260	78	229			489	19:45	122	508	104	583			1091
08:00	110		69					20:00	119		82				
08:15	121		108					20:15	89		110				
08:30	105		124					20:30	122		112				
08:45	131	467	177	478			945	20:45	88	418	83	387			805
09:00	136		180					21:00	74		72				
09:15	198		187					21:15	73		66				
09:30	180		237					21:30	51		77				
09:45	172	686	201	805			1491	21:45	64	262	63	278			540
10:00	191		171					22:00	64		46				
10:15	193		221					22:15	49		40				
10:30	227		205					22:30	40		54				
10:45	236	847	189	786			1633	22:45	46	199	32	172			371
11:00	227		199					23:00	28		43				
11:15	199		220					23:15	41		32				
11:30	179		183					23:30	22		33				
11:45	225	830	235	837			1667	23:45	22	113	28	136			249
Total Vol.		3576		3685			**7261**			6895		6824			**13719**

Daily Totals

	NB	SB	EB	WB	Combined
	10471	10509			**20980**

	AM			PM		
Split %	49.2%	50.8%	**34.6%**	50.3%	49.7%	**65.4%**
Peak Hour	11:45	11:15	**11:45**	12:30	12:00	**12:00**
Volume	905	953	**1844**	934	911	**1813**
P.H.F.	0.92	0.76	**0.82**	0.96	0.72	**0.81**

Volumes for: Wednesday, October 10, 2007 City: Westminster Project #: 07-1280-057

Location: Magnolia S btwn McFadden Ave & Bishop Pl

AM Period	NB		SB		EB	WB		PM Period	NB		SB		EB	WB	
00:00	56		29					12:00	216		205				
00:15	51		22					12:15	221		197				
00:30	36		18					12:30	204		234				
00:45	15	158	17	86			244	12:45	213	854	221	857			1711
01:00	25		14					13:00	209		232				
01:15	25		9					13:15	204		241				
01:30	10		10					13:30	216		237				
01:45	19	79	9	42			121	13:45	206	835	244	954			1789
02:00	18		9					14:00	212		232				
02:15	14		13					14:15	278		216				
02:30	28		10					14:30	239		243				
02:45	7	67	7	39			106	14:45	305	1034	276	967			2001
03:00	11		6					15:00	332		230				
03:15	14		11					15:15	338		233				
03:30	9		11					15:30	345		241				
03:45	11	45	7	35			80	15:45	340	1355	240	944			2299
04:00	11		20					16:00	288		274				
04:15	21		23					16:15	323		230				
04:30	21		59					16:30	315		284				
04:45	29	82	37	139			221	16:45	351	1277	212	1000			2277
05:00	22		70					17:00	361		252				
05:15	44		130					17:15	337		254				
05:30	42		130					17:30	320		258				
05:45	55	163	120	450			613	17:45	370	1388	250	1014			2402
06:00	82		150					18:00	346		256				
06:15	79		178					18:15	356		257				
06:30	73		220					18:30	328		234				
06:45	132	366	260	808			1174	18:45	280	1310	201	948			2258
07:00	153		277					19:00	279		231				
07:15	166		407					19:15	222		205				
07:30	187		427					19:30	264		143				
07:45	218	724	361	1472			2196	19:45	216	981	163	742			1723
08:00	208		385					20:00	208		135				
08:15	182		377					20:15	180		133				
08:30	172		364					20:30	182		122				
08:45	183	745	286	1412			2157	20:45	151	721	119	509			1230
09:00	165		255					21:00	175		99				
09:15	198		240					21:15	136		126				
09:30	189		216					21:30	138		104				
09:45	217	769	201	912			1681	21:45	131	580	89	418			998
10:00	158		199					22:00	100		90				
10:15	153		188					22:15	104		63				
10:30	166		192					22:30	65		57				
10:45	182	659	218	797			1456	22:45	79	348	52	262			610
11:00	217		177					23:00	80		45				
11:15	248		203					23:15	68		37				
11:30	224		223					23:30	68		29				
11:45	212	901	185	788			1689	23:45	60	276	40	151			427
Total Vol.		4758		6980			**11738**			10959		8766			**19725**

Daily Totals

NB	SB	EB	WB	Combined
15717	15746			**31463**

	AM			PM		
Split %	40.5%	59.5%	**37.3%**	55.6%	44.4%	**62.7%**
Peak Hour	11:00	07:15	**07:15**	17:45	15:45	**17:30**
Volume	901	1580	**2359**	1400	1028	**2413**
P.H.F.	0.91	0.93	**0.96**	0.96	0.90	**0.97**

Volumes for: Monday, October 15, 2007 City: Westminster Project #: 07-1280-061

Location: Bushard St btwn McFaden Ave & Bishop Pl

AM Period	NB		SB		EB	WB		PM Period	NB		SB		EB	WB	
00:00	13		10					12:00	94		90				
00:15	9		8					12:15	93		84				
00:30	6		7					12:30	101		97				
00:45	6	34	4	29			63	12:45	96	384	89	360			744
01:00	5		2					13:00	93		93				
01:15	5		5					13:15	95		95				
01:30	4		4					13:30	99		95				
01:45	3	17	1	12			29	13:45	101	388	98	381			769
02:00	4		2					14:00	117		115				
02:15	2		3					14:15	127		132				
02:30	2		4					14:30	144		152				
02:45	3	11	3	12			23	14:45	137	525	141	540			1065
03:00	2		5					15:00	150		126				
03:15	3		3					15:15	144		121				
03:30	5		5					15:30	138		120				
03:45	5	15	8	21			36	15:45	150	582	131	498			1080
04:00	5		9					16:00	200		121				
04:15	6		12					16:15	185		128				
04:30	7		14					16:30	211		119				
04:45	9	27	11	46			73	16:45	224	820	133	501			1321
05:00	12		16					17:00	234		138				
05:15	21		31					17:15	227		136				
05:30	23		33					17:30	224		132				
05:45	21	77	20	100			177	17:45	211	896	137	543			1439
06:00	26		27					18:00	154		112				
06:15	49		68					18:15	139		113				
06:30	61		77					18:30	134		115				
06:45	70	206	95	267			473	18:45	122	549	101	441			990
07:00	81		104					19:00	97		104				
07:15	123		170					19:15	95		99				
07:30	140		168					19:30	83		83				
07:45	142	486	148	590			1076	19:45	72	347	76	362			709
08:00	158		107					20:00	73		68				
08:15	117		113					20:15	72		54				
08:30	95		106					20:30	57		69				
08:45	93	463	84	410			873	20:45	60	262	66	257			519
09:00	90		91					21:00	46		56				
09:15	96		94					21:15	42		46				
09:30	92		96					21:30	38		36				
09:45	81	359	86	367			726	21:45	39	165	33	171			336
10:00	82		93					22:00	39		32				
10:15	80		91					22:15	27		25				
10:30	75		83					22:30	28		26				
10:45	84	321	80	347			668	22:45	27	121	19	102			223
11:00	86		79					23:00	22		9				
11:15	83		95					23:15	17		14				
11:30	85		94					23:30	14		8				
11:45	89	343	93	361			704	23:45	12	65	13	44			109
Total Vol.		2359		2562			**4921**			5104		4200			**9304**

Daily Totals

NB	SB	EB	WB	**Combined**
7463	6762			**14225**

	AM			**PM**		
Split %	47.9%	52.1%	**34.6%**	54.9%	45.1%	**65.4%**
Peak Hour	07:15	07:15	**07:15**	16:45	14:15	**16:45**
Volume	563	593	**1156**	909	551	**1448**
P.H.F.	0.89	0.87	**0.94**	0.97	0.91	**0.97**

Volumes for: Tuesday, October 16, 2007 City: Westminster Project #: 07-1280-061

Location: Bushard St btwn McFaden Ave & Bishop Pl

AM Period	NB		SB		EB	WB		PM Period	NB		SB		EB	WB	
00:00	12		10					12:00	132		100				
00:15	10		6					12:15	134		87				
00:30	6		7					12:30	136		85				
00:45	7	35	5	28			63	12:45	119	521	92	364			885
01:00	7		7					13:00	142		103				
01:15	5		5					13:15	131		108				
01:30	4		1					13:30	126		110				
01:45	5	21	3	16			37	13:45	126	525	101	422			947
02:00	5		4					14:00	162		111				
02:15	4		4					14:15	165		134				
02:30	3		3					14:30	180		143				
02:45	3	15	4	15			30	14:45	207	714	131	519			1233
03:00	4		4					15:00	200		122				
03:15	4		6					15:15	182		123				
03:30	3		4					15:30	189		120				
03:45	5	16	7	21			37	15:45	190	761	125	490			1251
04:00	8		11					16:00	248		123				
04:15	11		13					16:15	243		115				
04:30	9		14					16:30	246		117				
04:45	13	41	14	52			93	16:45	266	1003	118	473			1476
05:00	17		22					17:00	327		156				
05:15	31		32					17:15	339		161				
05:30	32		26					17:30	312		145				
05:45	19	99	23	103			202	17:45	310	1288	133	595			1883
06:00	29		39					18:00	224		130				
06:15	47		55					18:15	200		118				
06:30	65		87					18:30	194		128				
06:45	72	213	90	271			484	18:45	161	779	123	499			1278
07:00	90		140					19:00	128		114				
07:15	114		196					19:15	119		103				
07:30	133		223					19:30	99		77				
07:45	155	492	146	705			1197	19:45	109	455	79	373			828
08:00	174		142					20:00	100		70				
08:15	171		121					20:15	82		61				
08:30	135		102					20:30	80		57				
08:45	109	589	104	469			1058	20:45	82	344	53	241			585
09:00	101		101					21:00	70		47				
09:15	99		90					21:15	53		45				
09:30	97		94					21:30	61		46				
09:45	93	390	99	384			774	21:45	63	247	47	185			432
10:00	88		90					22:00	49		38				
10:15	83		81					22:15	39		37				
10:30	88		75					22:30	35		23				
10:45	94	353	83	329			682	22:45	32	155	20	118			273
11:00	84		88					23:00	28		18				
11:15	96		94					23:15	22		13				
11:30	103		90					23:30	26		11				
11:45	105	388	97	369			757	23:45	24	100	9	51			151
Total Vol.		2652		2762			**5414**			6892		4330			**11222**

Daily Totals

	NB	SB	EB	WB	Combined
	9544	7092			**16636**

	AM			PM		
Split %	49.0%	51.0%	**32.5%**	61.4%	38.6%	**67.5%**
Peak Hour	07:45	07:15	**07:15**	17:00	17:00	**17:00**
Volume	635	707	**1283**	1288	595	**1883**
P.H.F.	0.91	0.79	**0.90**	0.95	0.92	**0.94**

Volumes for: Wednesday, October 17, 2007 City: Westminster Project #: 07-1280-061

Location: Bushard St btwn McFaden Ave & Bishop Pl

AM Period	NB		SB		EB	WB		PM Period	NB		SB		EB	WB	
00:00	14		12					12:00	103		97				
00:15	10		7					12:15	97		101				
00:30	9		6					12:30	89		95				
00:45	9	42	13	38			80	12:45	93	382	92	385			767
01:00	4		9					13:00	95		93				
01:15	3		7					13:15	96		113				
01:30	2		5					13:30	98		115				
01:45	2	11	2	23			34	13:45	118	407	112	433			840
02:00	5		7					14:00	121		94				
02:15	2		1					14:15	105		105				
02:30	3		0					14:30	117		123				
02:45	2	12	1	9			21	14:45	132	475	127	449			924
03:00	4		4					15:00	125		131				
03:15	5		5					15:15	127		116				
03:30	4		4					15:30	137		112				
03:45	3	16	4	17			33	15:45	140	529	128	487			1016
04:00	5		9					16:00	202		126				
04:15	11		11					16:15	196		121				
04:30	14		21					16:30	198		122				
04:45	16	46	19	60			106	16:45	217	813	130	499			1312
05:00	14		26					17:00	223		140				
05:15	19		35					17:15	200		137				
05:30	25		37					17:30	239		138				
05:45	24	82	42	140			222	17:45	238	900	135	550			1450
06:00	25		51					18:00	164		119				
06:15	48		59					18:15	136		120				
06:30	71		104					18:30	128		110				
06:45	66	210	87	301			511	18:45	120	548	108	457			1005
07:00	98		80					19:00	109		91				
07:15	128		148					19:15	94		93				
07:30	145		168					19:30	92		92				
07:45	143	514	133	529			1043	19:45	78	373	79	355			728
08:00	144		145					20:00	70		69				
08:15	132		166					20:15	57		66				
08:30	96		98					20:30	61		65				
08:45	94	466	94	503			969	20:45	60	248	59	259			507
09:00	83		100					21:00	53		58				
09:15	77		94					21:15	51		47				
09:30	91		97					21:30	43		38				
09:45	89	340	66	357			697	21:45	41	188	34	177			365
10:00	81		83					22:00	32		45				
10:15	80		78					22:15	26		25				
10:30	81		91					22:30	21		24				
10:45	83	325	93	345			670	22:45	24	103	20	114			217
11:00	84		88					23:00	23		17				
11:15	87		77					23:15	15		19				
11:30	80		86					23:30	13		16				
11:45	84	335	80	331			666	23:45	11	62	15	67			129
Total Vol.		2399		2653			**5052**			5028		4232			**9260**

Daily Totals

NB	SB	EB	WB	Combined
7427	6885			**14312**

	AM			PM		
Split %	47.5%	52.5%	**35.3%**	54.3%	45.7%	**64.7%**
Peak Hour	07:30	07:30	**07:30**	17:00	17:00	**17:00**
Volume	564	612	**1176**	900	550	**1450**
P.H.F.	0.97	0.91	**0.94**	0.94	0.98	**0.96**

Volumes for: Thursday, October 18, 2007 City: Westminster Project #: 07-1280-061

Location: Bushard St btwn McFaden Ave & Bishop Pl

AM Period	NB		SB		EB	WB		PM Period	NB		SB		EB	WB	
00:00	12		11					12:00	112		99				
00:15	13		8					12:15	99		95				
00:30	5		6					12:30	95		101				
00:45	8	38	5	30			68	12:45	96	402	93	388			790
01:00	7		6					13:00	107		84				
01:15	4		5					13:15	102		92				
01:30	4		2					13:30	97		95				
01:45	3	18	3	16			34	13:45	99	405	105	376			781
02:00	5		5					14:00	97		115				
02:15	4		6					14:15	103		121				
02:30	4		2					14:30	108		136				
02:45	3	16	7	20			36	14:45	129	437	118	490			927
03:00	2		6					15:00	118		123				
03:15	3		5					15:15	125		124				
03:30	5		3					15:30	143		133				
03:45	7	17	8	22			39	15:45	148	534	146	526			1060
04:00	11		7					16:00	167		114				
04:15	13		13					16:15	186		128				
04:30	8		15					16:30	189		123				
04:45	11	43	20	55			98	16:45	204	746	124	489			1235
05:00	16		23					17:00	230		136				
05:15	23		33					17:15	238		148				
05:30	24		37					17:30	228		143				
05:45	26	89	39	132			221	17:45	219	915	144	571			1486
06:00	29		45					18:00	216		120				
06:15	47		104					18:15	153		125				
06:30	71		100					18:30	147		122				
06:45	67	214	136	385			599	18:45	134	650	111	478			1128
07:00	97		131					19:00	113		101				
07:15	156		194					19:15	99		89				
07:30	168		258					19:30	96		83				
07:45	125	546	189	772			1318	19:45	87	395	79	352			747
08:00	164		177					20:00	89		71				
08:15	130		147					20:15	71		74				
08:30	107		119					20:30	63		69				
08:45	89	490	91	534			1024	20:45	66	289	58	272			561
09:00	89		99					21:00	65		57				
09:15	90		107					21:15	59		62				
09:30	85		83					21:30	55		58				
09:45	98	362	81	370			732	21:45	48	227	49	226			453
10:00	99		85					22:00	47		35				
10:15	88		90					22:15	35		31				
10:30	85		86					22:30	31		20				
10:45	77	349	80	341			690	22:45	23	136	15	101			237
11:00	79		92					23:00	24		21				
11:15	84		103					23:15	20		18				
11:30	85		97					23:30	19		16				
11:45	84	332	101	393			725	23:45	16	79	15	70			149
Total Vol.		2514		3070			**5584**			5215		4339			**9554**

Daily Totals

NB	SB	EB	WB	Combined
7729	7409			**15138**

	AM			PM		
Split %	45.0%	55.0%	**36.9%**	54.6%	45.4%	**63.1%**
Peak Hour	07:15	07:15	**07:15**	17:00	17:00	**17:00**
Volume	613	818	**1431**	915	571	**1486**
P.H.F.	0.91	0.79	**0.84**	0.97	0.96	**0.96**

Volumes for: Friday, October 19, 2007 City: Westminster Project #: 07-1280-061

Location: Bushard St btwn McFaden Ave & Bishop Pl

AM Period	NB		SB		EB	WB		PM Period	NB		SB		EB	WB	
00:00	15		9					12:00	106		105				
00:15	8		8					12:15	107		107				
00:30	7		9					12:30	95		102				
00:45	9	39	13	39			78	12:45	96	404	100	414			818
01:00	11		11					13:00	92		95				
01:15	6		8					13:15	93		96				
01:30	7		4					13:30	100		114				
01:45	6	30	5	28			58	13:45	121	406	133	438			844
02:00	4		4					14:00	118		128				
02:15	6		6					14:15	115		145				
02:30	5		4					14:30	134		126				
02:45	4	19	6	20			39	14:45	152	519	139	538			1057
03:00	5		8					15:00	145		131				
03:15	7		5					15:15	143		119				
03:30	6		5					15:30	144		116				
03:45	4	22	4	22			44	15:45	132	564	124	490			1054
04:00	11		7					16:00	173		113				
04:15	13		13					16:15	197		114				
04:30	11		14					16:30	212		121				
04:45	10	45	14	48			93	16:45	209	791	126	474			1265
05:00	17		28					17:00	202		130				
05:15	20		32					17:15	216		117				
05:30	28		40					17:30	209		116				
05:45	25	90	39	139			229	17:45	227	854	139	502			1356
06:00	32		55					18:00	148		132				
06:15	38		75					18:15	150		128				
06:30	56		80					18:30	145		124				
06:45	69	195	99	309			504	18:45	124	567	118	502			1069
07:00	79		117					19:00	118		108				
07:15	100		137					19:15	93		104				
07:30	134		149					19:30	89		98				
07:45	150	463	163	566			1029	19:45	83	383	96	406			789
08:00	149		147					20:00	85		90				
08:15	133		119					20:15	72		77				
08:30	109		98					20:30	68		71				
08:45	98	489	99	463			952	20:45	70	295	61	299			594
09:00	98		104					21:00	72		60				
09:15	94		88					21:15	56		61				
09:30	87		95					21:30	54		56				
09:45	85	364	97	384			748	21:45	48	230	51	228			458
10:00	83		90					22:00	41		40				
10:15	87		85					22:15	40		43				
10:30	92		90					22:30	39		31				
10:45	95	357	93	358			715	22:45	36	156	42	156			312
11:00	91		91					23:00	22		27				
11:15	101		87					23:15	23		22				
11:30	97		96					23:30	22		17				
11:45	95	384	97	371			755	23:45	27	94	19	85			179
Total Vol.		2497		2747			**5244**			5263		4532			**9795**

Daily Totals

NB	SB	EB	WB	Combined
7760	7279			**15039**

	AM			PM		
Split %	47.6%	52.4%	**34.9%**	53.7%	46.3%	**65.1%**
Peak Hour	07:30	07:15	**07:30**	17:00	14:15	**17:00**
Volume	566	596	**1144**	854	541	**1356**
P.H.F.	0.94	0.91	**0.91**	0.97	0.93	**0.93**

Volumes for: Saturday, October 20, 2007 City: Westminster Project #: 07-1280-061

Location: Bushard St btwn McFaden Ave & Bishop Pl

AM Period	NB		SB		EB	WB		PM Period	NB		SB		EB	WB	
00:00	20		17					12:00	134		127				
00:15	18		15					12:15	138		130				
00:30	18		17					12:30	132		122				
00:45	21	77	18	67			144	12:45	130	534	124	503			1037
01:00	15		12					13:00	121		138				
01:15	14		11					13:15	124		132				
01:30	13		9					13:30	125		128				
01:45	13	55	16	48			103	13:45	119	489	121	519			1008
02:00	13		15					14:00	120		118				
02:15	8		9					14:15	115		108				
02:30	7		5					14:30	121		114				
02:45	7	35	7	36			71	14:45	117	473	113	453			926
03:00	7		8					15:00	100		103				
03:15	5		10					15:15	98		88				
03:30	4		8					15:30	100		94				
03:45	4	20	11	37			57	15:45	109	407	95	380			787
04:00	6		6					16:00	103		93				
04:15	10		11					16:15	108		101				
04:30	8		15					16:30	114		104				
04:45	9	33	8	40			73	16:45	112	437	91	389			826
05:00	11		5					17:00	111		100				
05:15	12		17					17:15	117		104				
05:30	12		23					17:30	116		111				
05:45	11	46	12	57			103	17:45	115	459	105	420			879
06:00	16		26					18:00	118		106				
06:15	19		34					18:15	121		108				
06:30	21		33					18:30	102		110				
06:45	25	81	38	131			212	18:45	104	445	113	437			882
07:00	39		43					19:00	106		96				
07:15	55		41					19:15	90		82				
07:30	65		73					19:30	82		108				
07:45	66	225	79	236			461	19:45	83	361	106	392			753
08:00	84		82					20:00	78		85				
08:15	107		86					20:15	54		82				
08:30	114		122					20:30	63		69				
08:45	105	410	99	389			799	20:45	65	260	90	326			586
09:00	105		111					21:00	65		71				
09:15	116		114					21:15	63		76				
09:30	124		113					21:30	55		58				
09:45	125	470	114	452			922	21:45	53	236	51	256			492
10:00	114		116					22:00	52		45				
10:15	111		119					22:15	50		41				
10:30	122		105					22:30	43		44				
10:45	120	467	115	455			922	22:45	35	180	41	171			351
11:00	122		119					23:00	23		36				
11:15	137		140					23:15	34		28				
11:30	136		136					23:30	22		25				
11:45	137	532	134	529			1061	23:45	23	102	27	116			218
Total Vol.		2451		2477			**4928**			4383		4362			**8745**

Daily Totals

	NB	SB	EB	WB	Combined
	6834	6839			**13673**

	AM			PM		
Split %	49.7%	50.3%	**36.0%**	50.1%	49.9%	**64.0%**
Peak Hour	11:30	11:15	**11:15**	12:00	12:45	**12:00**
Volume	545	537	**1081**	534	522	**1037**
P.H.F.	0.99	0.96	**0.98**	0.97	0.95	**0.97**

Volumes for: Sunday, October 21, 2007 City: Westminster Project #: 07-1280-061

Location: Bushard St btwn McFaden Ave & Bishop Pl

AM Period	NB		SB		EB	WB		PM Period	NB		SB		EB	WB	
00:00	22		24					12:00	117		120				
00:15	19		20					12:15	116		121				
00:30	18		17					12:30	114		119				
00:45	23	82	16	77			159	12:45	112	459	139	499			958
01:00	22		10					13:00	119		142				
01:15	13		17					13:15	113		116				
01:30	10		12					13:30	110		105				
01:45	11	56	10	49			105	13:45	106	448	88	451			899
02:00	8		8					14:00	97		8				
02:15	6		8					14:15	94		89				
02:30	8		11					14:30	100		93				
02:45	10	32	4	31			63	14:45	99	390	95	285			675
03:00	8		6					15:00	116		98				
03:15	4		7					15:15	106		108				
03:30	3		5					15:30	104		125				
03:45	3	18	7	25			43	15:45	96	422	104	435			857
04:00	4		6					16:00	92		94				
04:15	2		1					16:15	91		90				
04:30	7		8					16:30	96		91				
04:45	6	19	7	22			41	16:45	83	362	95	370			732
05:00	8		3					17:00	76		90				
05:15	12		9					17:15	71		86				
05:30	10		13					17:30	87		82				
05:45	11	41	9	34			75	17:45	98	332	106	364			696
06:00	13		11					18:00	107		100				
06:15	11		14					18:15	101		92				
06:30	16		12					18:30	85		79				
06:45	15	55	15	52			107	18:45	79	372	81	352			724
07:00	24		25					19:00	86		84				
07:15	26		35					19:15	77		76				
07:30	38		43					19:30	68		64				
07:45	42	130	40	143			273	19:45	70	301	60	284			585
08:00	62		61					20:00	59		54				
08:15	64		59					20:15	52		56				
08:30	69		64					20:30	47		47				
08:45	73	268	73	257			525	20:45	49	207	50	207			414
09:00	84		69					21:00	42		44				
09:15	95		72					21:15	43		50				
09:30	105		90					21:30	40		49				
09:45	96	380	100	331			711	21:45	41	166	34	177			343
10:00	100		97					22:00	29		22				
10:15	122		118					22:15	21		19				
10:30	127		125					22:30	20		27				
10:45	100	449	119	459			908	22:45	24	94	26	94			188
11:00	120		98					23:00	25		12				
11:15	122		112					23:15	19		10				
11:30	114		115					23:30	9		12				
11:45	113	469	117	442			911	23:45	10	63	11	45			108
Total Vol.		1999		1922			**3921**			3616		3563			**7179**

Daily Totals

NB	SB	EB	WB	Combined
5615	5485			**11100**

	AM			PM		
Split %	51.0%	49.0%	**35.3%**	50.4%	49.6%	**64.7%**
Peak Hour	10:15	11:45	**11:45**	12:15	12:15	**12:15**
Volume	469	477	**937**	461	521	**982**
P.H.F.	0.92	0.99	**0.99**	0.98	0.92	**0.94**

Volumes for: Monday, October 15, 2007 City: Westminster Project #: 07-1280-064

Location: Brookhurst St btwn Bishop Pl & Bolsa Ave

AM Period	NB		SB		EB	WB		PM Period	NB		SB		EB	WB	
00:00	64		54		#NAME?			12:00	351		331				
00:15	46		39					12:15	349		342				
00:30	33		36					12:30	340		352				
00:45	26	169	37	166			335	12:45	317	1357	354	1379			2736
01:00	25		27					13:00	352		341				
01:15	27		29					13:15	356		338				
01:30	19		21					13:30	329		346				
01:45	16	87	26	103			190	13:45	355	1392	359	1384			2776
02:00	16		18					14:00	365		344				
02:15	22		15					14:15	308		340				
02:30	12		21					14:30	358		376				
02:45	13	63	20	74			137	14:45	394	1425	373	1433			2858
03:00	11		16					15:00	441		381				
03:15	12		12					15:15	444		369				
03:30	16		18					15:30	392		355				
03:45	16	55	25	71			126	15:45	386	1663	371	1476			3139
04:00	15		27					16:00	390		356				
04:15	29		49					16:15	456		370				
04:30	37		51					16:30	460		319				
04:45	41	122	63	190			312	16:45	401	1707	328	1373			3080
05:00	49		88					17:00	452		360				
05:15	45		104					17:15	485		376				
05:30	51		141					17:30	418		378				
05:45	74	219	132	465			684	17:45	430	1785	351	1465			3250
06:00	92		178					18:00	446		339				
06:15	112		203					18:15	417		300				
06:30	133		284					18:30	359		296				
06:45	169	506	304	969			1475	18:45	321	1543	278	1213			2756
07:00	188		326					19:00	294		260				
07:15	246		434					19:15	281		247				
07:30	261		422					19:30	271		230				
07:45	277	972	428	1610			2582	19:45	226	1072	244	981			2053
08:00	243		428					20:00	199		221				
08:15	236		366					20:15	190		222				
08:30	235		341					20:30	190		190				
08:45	223	937	304	1439			2376	20:45	183	762	189	822			1584
09:00	236		294					21:00	183		166				
09:15	234		287					21:15	185		158				
09:30	263		299					21:30	143		128				
09:45	262	995	329	1209			2204	21:45	149	660	124	576			1236
10:00	262		333					22:00	153		115				
10:15	268		322					22:15	102		109				
10:30	309		328					22:30	96		81				
10:45	300	1139	318	1301			2440	22:45	90	441	69	374			815
11:00	293		316					23:00	81		75				
11:15	304		341					23:15	73		75				
11:30	334		379					23:30	71		54				
11:45	328	1259	382	1418			2677	23:45	72	297	41	245			542
Total Vol.		6523		9015			**15538**			14104		12721			**26825**

Daily Totals

NB	SB	EB	WB	Combined
20627	21736			**42363**

	AM				PM		
Split %	42.0%	58.0%		**36.7%**	52.6%	47.4%	**63.3%**
Peak Hour	11:45	07:15	####	**#NAME?**	16:30	14:30	**17:00**
Volume	1368	1712	#NAME?	**#NAME?**	1798	1499	**3250**
P.H.F.	0.97	0.99	####	**#NAME?**	0.96	0.98	**0.94**

Volumes for: Tuesday, October 09, 2007 City: Westminster Project #: 07-1280-065

Location: Brookhurst St btwn Bolsa Ave & Hazard Ave

AM Period	NB		SB		EB	WB		PM Period	NB		SB		EB	WB	
00:00	68		40					12:00	315		311				
00:15	60		28					12:15	330		340				
00:30	39		47					12:30	352		334				
00:45	33	200	17	132			332	12:45	325	1322	324	1309			2631
01:00	37		17					13:00	343		331				
01:15	25		25					13:15	292		298				
01:30	28		21					13:30	309		329				
01:45	17	107	17	80			187	13:45	325	1269	308	1266			2535
02:00	26		13					14:00	326		337				
02:15	18		16					14:15	307		312				
02:30	12		12					14:30	331		349				
02:45	14	70	22	63			133	14:45	372	1336	360	1358			2694
03:00	16		14					15:00	419		347				
03:15	12		14					15:15	381		342				
03:30	3		16					15:30	387		354				
03:45	17	48	22	66			114	15:45	427	1614	325	1368			2982
04:00	15		18					16:00	418		372				
04:15	27		32					16:15	428		341				
04:30	28		61					16:30	402		347				
04:45	42	112	64	175			287	16:45	427	1675	365	1425			3100
05:00	41		80					17:00	440		342				
05:15	54		108					17:15	462		355				
05:30	48		170					17:30	429		400				
05:45	71	214	131	489			703	17:45	464	1795	331	1428			3223
06:00	75		133					18:00	459		366				
06:15	95		201					18:15	455		309				
06:30	109		317					18:30	406		340				
06:45	146	425	296	947			1372	18:45	368	1688	309	1324			3012
07:00	177		345					19:00	351		327				
07:15	197		446					19:15	327		290				
07:30	255		556					19:30	300		290				
07:45	271	900	430	1777			2677	19:45	296	1274	244	1151			2425
08:00	259		463					20:00	267		221				
08:15	281		395					20:15	220		191				
08:30	262		373					20:30	255		206				
08:45	269	1071	387	1618			2689	20:45	210	952	187	805			1757
09:00	235		333					21:00	241		192				
09:15	240		328					21:15	165		202				
09:30	231		308					21:30	178		196				
09:45	268	974	296	1265			2239	21:45	157	741	174	764			1505
10:00	276		346					22:00	130		138				
10:15	273		301					22:15	145		107				
10:30	267		337					22:30	95		105				
10:45	308	1124	328	1312			2436	22:45	100	470	79	429			899
11:00	299		328					23:00	92		74				
11:15	332		334					23:15	94		69				
11:30	297		312					23:30	76		50				
11:45	347	1275	303	1277			2552	23:45	66	328	59	252			580
Total Vol.		6520		9201			**15721**			14464		12879			**27343**

Daily Totals

	NB	SB	EB	WB	Combined
	20984	22080			**43064**

	AM			PM		
Split %	41.5%	58.5%	**36.5%**	52.9%	47.1%	**63.5%**
Peak Hour	11:45	07:15	**07:30**	17:15	16:45	**17:15**
Volume	1344	1895	**2910**	1814	1462	**3266**
P.H.F.	0.95	0.85	**0.90**	0.98	0.91	**0.98**

Volumes for: Sunday, October 14, 2007 City: Westminster Project #: 07-1280-018

Location: Hazard Ave btwn Bushard St & Brookhurst St

AM Period	NB	SB	EB		WB			PM Period	NB	SB	EB		WB		
00:00			35		57			12:00			305		258		
00:15			39		38			12:15			269		251		
00:30			49		42			12:30			208		257		
00:45			41	164	27	164	328	12:45			248	1030	235	1001	2031
01:00			20		40			13:00			242		241		
01:15			40		17			13:15			228		238		
01:30			36		38			13:30			214		250		
01:45			24	120	37	132	252	13:45			264	948	230	959	1907
02:00			32		28			14:00			218		219		
02:15			28		29			14:15			226		226		
02:30			21		12			14:30			224		210		
02:45			12	93	17	86	179	14:45			209	877	195	850	1727
03:00			18		15			15:00			230		195		
03:15			17		10			15:15			201		217		
03:30			14		12			15:30			223		203		
03:45			17	66	15	52	118	15:45			209	863	183	798	1661
04:00			14		6			16:00			213		184		
04:15			3		12			16:15			182		203		
04:30			20		14			16:30			184		198		
04:45			13	50	18	50	100	16:45			186	765	185	770	1535
05:00			7		10			17:00			216		208		
05:15			18		13			17:15			220		173		
05:30			23		9			17:30			210		181		
05:45			20	68	26	58	126	17:45			246	892	181	743	1635
06:00			33		22			18:00			208		246		
06:15			37		35			18:15			214		179		
06:30			36		38			18:30			226		189		
06:45			50	156	29	124	280	18:45			211	859	176	790	1649
07:00			32		49			19:00			230		211		
07:15			54		44			19:15			187		161		
07:30			71		88			19:30			159		152		
07:45			103	260	124	305	565	19:45			124	700	168	692	1392
08:00			114		108			20:00			114		124		
08:15			117		127			20:15			111		106		
08:30			157		149			20:30			156		139		
08:45			198	586	166	550	1136	20:45			101	482	143	512	994
09:00			225		200			21:00			116		117		
09:15			200		194			21:15			100		107		
09:30			196		200			21:30			99		78		
09:45			243	864	206	800	1664	21:45			76	391	94	396	787
10:00			216		208			22:00			57		86		
10:15			202		213			22:15			57		81		
10:30			239		238			22:30			43		54		
10:45			205	862	238	897	1759	22:45			47	204	57	278	482
11:00			234		257			23:00			55		55		
11:15			250		215			23:15			27		42		
11:30			204		244			23:30			32		37		
11:45			234	922	254	970	1892	23:45			41	155	29	163	318
Total Vol.			4211		4188		**8399**				8166		7952		**16118**

Daily Totals

NB	SB	EB	WB	Combined
		12377	12140	**24517**

	AM			PM		
Split %	50.1%	49.9%	**34.3%**	50.7%	49.3%	**65.7%**
Peak Hour	11:45	11:45	**11:45**	12:00	12:00	**12:00**
Volume	1016	1020	**2036**	1030	1001	**2031**
P.H.F.	0.83	0.99	**0.90**	0.84	0.97	**0.90**

Volumes for: Sunday, October 14, 2007 City: Westminster Project #: 07-1280-017

Location: Hazard Ave btwn Newland St & Magnolia St

AM Period	NB	SB	EB		WB			PM Period	NB	SB	EB		WB		
00:00			51		60			12:00			242		259		
00:15			23		42			12:15			254		238		
00:30			26		40			12:30			252		254		
00:45			21	121	35	177	298	12:45			244	992	224	975	1967
01:00			31		44			13:00			261		249		
01:15			23		36			13:15			274		245		
01:30			23		30			13:30			268		237		
01:45			29	106	34	144	250	13:45			223	1026	242	973	1999
02:00			29		41			14:00			214		223		
02:15			18		31			14:15			220		211		
02:30			17		25			14:30			215		244		
02:45			9	73	14	111	184	14:45			213	862	229	907	1769
03:00			9		11			15:00			200		243		
03:15			9		14			15:15			167		213		
03:30			10		13			15:30			178		221		
03:45			9	37	11	49	86	15:45			189	734	202	879	1613
04:00			13		10			16:00			156		206		
04:15			7		12			16:15			191		198		
04:30			17		18			16:30			181		205		
04:45			12	49	13	53	102	16:45			196	724	209	818	1542
05:00			14		12			17:00			185		190		
05:15			20		17			17:15			181		180		
05:30			37		29			17:30			191		217		
05:45			36	107	35	93	200	17:45			197	754	227	814	1568
06:00			32		34			18:00			147		197		
06:15			31		28			18:15			186		219		
06:30			48		42			18:30			189		200		
06:45			54	165	59	163	328	18:45			177	699	203	819	1518
07:00			62		64			19:00			158		193		
07:15			97		84			19:15			105		160		
07:30			108		86			19:30			98		114		
07:45			124	391	106	340	731	19:45			110	471	146	613	1084
08:00			120		112			20:00			100		135		
08:15			144		120			20:15			84		121		
08:30			156		153			20:30			99		117		
08:45			213	633	174	559	1192	20:45			95	378	123	496	874
09:00			185		175			21:00			89		126		
09:15			219		192			21:15			68		104		
09:30			265		208			21:30			61		88		
09:45			240	909	218	793	1702	21:45			43	261	77	395	656
10:00			227		227			22:00			58		63		
10:15			277		220			22:15			52		55		
10:30			251		248			22:30			41		48		
10:45			269	1024	229	924	1948	22:45			39	190	55	221	411
11:00			258		223			23:00			52		42		
11:15			216		210			23:15			18		33		
11:30			266		238			23:30			21		26		
11:45			286	1026	238	909	1935	23:45			13	104	28	129	233
Total Vol.			4641		4315		**8956**				7195		8039		**15234**

Daily Totals

	NB	SB	EB	WB	Combined
			11836	12354	**24190**

	AM			PM		
Split %	51.8%	48.2%	**37.0%**	47.2%	52.8%	**63.0%**
Peak Hour	10:15	11:45	**11:45**	12:45	12:00	**12:30**
Volume	1055	989	**2023**	1047	975	**2003**
P.H.F.	0.95	0.95	**0.97**	0.96	0.94	**0.96**

Volumes for: Tuesday, October 09, 2007 City: Westminster Project #: 07-1280-024

Location: Bolsa Ave btwn Bushard St & Brookhurst St

AM Period	NB	SB	EB		WB			PM Period	NB	SB	EB		WB		
00:00			41		32			12:00			350		311		
00:15			34		36			12:15			314		333		
00:30			26		24			12:30			300		333		
00:45			27	128	23	115	243	12:45			319	1283	297	1274	2557
01:00			40		27			13:00			319		277		
01:15			27		15			13:15			281		297		
01:30			21		16			13:30			297		300		
01:45			32	120	16	74	194	13:45			287	1184	277	1151	2335
02:00			22		15			14:00			294		260		
02:15			15		13			14:15			282		281		
02:30			20		12			14:30			261		281		
02:45			9	66	10	50	116	14:45			302	1139	276	1098	2237
03:00			12		14			15:00			305		347		
03:15			15		12			15:15			270		295		
03:30			8		13			15:30			314		320		
03:45			6	41	13	52	93	15:45			339	1228	317	1279	2507
04:00			22		13			16:00			295		303		
04:15			5		26			16:15			314		299		
04:30			23		43			16:30			309		307		
04:45			20	70	41	123	193	16:45			320	1238	295	1204	2442
05:00			36		38			17:00			356		323		
05:15			46		51			17:15			327		342		
05:30			48		63			17:30			326		341		
05:45			43	173	61	213	386	17:45			332	1341	318	1324	2665
06:00			47		54			18:00			345		318		
06:15			69		86			18:15			309		271		
06:30			76		101			18:30			336		286		
06:45			94	286	110	351	637	18:45			264	1254	224	1099	2353
07:00			109		108			19:00			300		244		
07:15			142		122			19:15			285		198		
07:30			156		160			19:30			215		193		
07:45			181	588	181	571	1159	19:45			226	1026	184	819	1845
08:00			209		214			20:00			234		155		
08:15			190		223			20:15			205		137		
08:30			241		218			20:30			169		146		
08:45			230	870	245	900	1770	20:45			164	772	130	568	1340
09:00			174		259			21:00			173		125		
09:15			227		256			21:15			136		127		
09:30			172		291			21:30			111		136		
09:45			208	781	278	1084	1865	21:45			103	523	78	466	989
10:00			230		282			22:00			91		95		
10:15			245		271			22:15			113		77		
10:30			246		270			22:30			83		78		
10:45			253	974	320	1143	2117	22:45			75	362	59	309	671
11:00			252		307			23:00			72		68		
11:15			285		309			23:15			53		62		
11:30			289		321			23:30			42		48		
11:45			304	1130	318	1255	2385	23:45			50	217	36	214	431
Total Vol.				5227		5931	**11158**					11567		10805	**22372**

Daily Totals

NB	SB	EB	WB	Combined
		16794	16736	**33530**

	AM			PM		
Split %	46.8%	53.2%	**33.3%**	51.7%	48.3%	**66.7%**
Peak Hour	11:45	11:45	**11:45**	17:00	17:00	**17:00**
Volume	1268	1295	**2563**	1341	1324	**2665**
P.H.F.	0.91	0.97	**0.97**	0.94	0.97	**0.98**

Volumes for: Wednesday, October 10, 2007 City: Westminster Project #: 07-1280-024

Location: Bolsa Ave btwn Bushard St & Brookhurst St

AM Period	NB	SB	EB		WB			PM Period	NB	SB	EB		WB		
00:00			46		39			12:00			304		314		
00:15			48		25			12:15			277		329		
00:30			35		20			12:30			285		345		
00:45			34	163	29	113	276	12:45			308	1174	288	1276	2450
01:00			35		31			13:00			273		320		
01:15			29		28			13:15			292		269		
01:30			24		17			13:30			265		264		
01:45			22	110	13	89	199	13:45			324	1154	255	1108	2262
02:00			16		15			14:00			291		270		
02:15			21		12			14:15			270		279		
02:30			12		8			14:30			316		281		
02:45			11	60	11	46	106	14:45			307	1184	289	1119	2303
03:00			11		12			15:00			309		303		
03:15			4		11			15:15			276		298		
03:30			6		8			15:30			275		287		
03:45			16	37	16	47	84	15:45			324	1184	281	1169	2353
04:00			8		14			16:00			293		279		
04:15			16		22			16:15			279		317		
04:30			27		28			16:30			330		269		
04:45			25	76	30	94	170	16:45			341	1243	262	1127	2370
05:00			32		32			17:00			325		300		
05:15			51		41			17:15			324		340		
05:30			38		79			17:30			319		337		
05:45			58	179	67	219	398	17:45			371	1339	360	1337	2676
06:00			37		54			18:00			321		303		
06:15			68		76			18:15			336		342		
06:30			91		108			18:30			329		286		
06:45			71	267	114	352	619	18:45			277	1263	246	1177	2440
07:00			102		102			19:00			333		244		
07:15			143		132			19:15			277		247		
07:30			167		196			19:30			250		171		
07:45			189	601	209	639	1240	19:45			204	1064	197	859	1923
08:00			276		250			20:00			197		165		
08:15			229		197			20:15			199		153		
08:30			247		181			20:30			190		135		
08:45			232	984	249	877	1861	20:45			224	810	145	598	1408
09:00			225		225			21:00			163		148		
09:15			223		263			21:15			148		122		
09:30			230		238			21:30			175		86		
09:45			259	937	304	1030	1967	21:45			105	591	103	459	1050
10:00			281		280			22:00			107		78		
10:15			255		299			22:15			110		103		
10:30			293		272			22:30			95		91		
10:45			278	1107	299	1150	2257	22:45			55	367	73	345	712
11:00			311		306			23:00			61		61		
11:15			291		305			23:15			72		60		
11:30			292		307			23:30			52		52		
11:45			329	1223	289	1207	2430	23:45			48	233	44	217	450
Total Vol.				5744		5863	**11607**					11606		10791	**22397**

Daily Totals

	NB	SB	EB	WB	Combined
			17350	16654	**34004**
			PM		
Split %			51.8%	48.2%	**65.9%**

	AM			**PM**		
Split %	49.5%	50.5%	**34.1%**	51.8%	48.2%	**65.9%**
Peak Hour	11:00	11:45	**11:45**	17:45	17:30	**17:30**
Volume	1223	1277	**2472**	1357	1342	**2689**
P.H.F.	0.93	0.93	**0.98**	0.91	0.93	**0.92**

Volumes for: Thursday, October 11, 2007 City: Westminster Project #: 07-1280-024

Location: Bolsa Ave btwn Bushard St & Brookhurst St

AM Period	NB	SB	EB		WB			PM Period	NB	SB	EB		WB		
00:00			47		36			12:00			309		310		
00:15			37		32			12:15			333		296		
00:30			42		27			12:30			300		294		
00:45			26	152	21	116	268	12:45			283	1225	316	1216	2441
01:00			46		15			13:00			304		297		
01:15			25		20			13:15			290		296		
01:30			25		13			13:30			254		304		
01:45			33	129	14	62	191	13:45			264	1112	285	1182	2294
02:00			23		14			14:00			247		263		
02:15			25		19			14:15			282		254		
02:30			21		23			14:30			296		259		
02:45			28	97	15	71	168	14:45			282	1107	296	1072	2179
03:00			10		16			15:00			294		291		
03:15			8		15			15:15			292		278		
03:30			14		16			15:30			314		278		
03:45			15	47	19	66	113	15:45			299	1199	306	1153	2352
04:00			16		19			16:00			243		305		
04:15			12		37			16:15			327		301		
04:30			16		38			16:30			287		305		
04:45			27	71	36	130	201	16:45			299	1156	306	1217	2373
05:00			34		40			17:00			310		308		
05:15			49		47			17:15			376		315		
05:30			36		53			17:30			355		297		
05:45			45	164	68	208	372	17:45			351	1392	297	1217	2609
06:00			48		60			18:00			340		302		
06:15			66		71			18:15			343		289		
06:30			71		104			18:30			326		240		
06:45			91	276	113	348	624	18:45			345	1354	231	1062	2416
07:00			116		99			19:00			338		206		
07:15			160		117			19:15			249		172		
07:30			206		198			19:30			243		179		
07:45			247	729	228	642	1371	19:45			240	1070	175	732	1802
08:00			232		210			20:00			212		141		
08:15			202		247			20:15			221		136		
08:30			220		239			20:30			174		131		
08:45			231	885	225	921	1806	20:45			176	783	131	539	1322
09:00			192		260			21:00			150		129		
09:15			188		261			21:15			166		119		
09:30			222		291			21:30			123		108		
09:45			218	820	284	1096	1916	21:45			119	558	89	445	1003
10:00			246		274			22:00			117		95		
10:15			240		267			22:15			87		82		
10:30			253		280			22:30			95		80		
10:45			265	1004	308	1129	2133	22:45			70	369	67	324	693
11:00			253		308			23:00			70		56		
11:15			312		337			23:15			73		46		
11:30			317		308			23:30			47		47		
11:45			275	1157	299	1252	2409	23:45			48	238	53	202	440
Total Vol.				5531		6041	**11572**					11563		10361	**21924**

Daily Totals

NB	SB	EB	WB	Combined
		17094	16402	**33496**

	AM			PM		
Split %	47.8%	52.2%	**34.5%**	52.7%	47.3%	**65.5%**
Peak Hour	11:30	10:45	**11:15**	17:15	16:30	**17:15**
Volume	1234	1261	**2467**	1422	1234	**2633**
P.H.F.	0.93	0.94	**0.95**	0.95	0.98	**0.95**

Volumes for: Friday, October 12, 2007 City: Westminster Project #: 07-1280-024

Location: Bolsa Ave btwn Bushard St & Brookhurst St

AM Period	NB	SB	EB		WB			PM Period	NB	SB	EB		WB		
00:00			41		44			12:00			315		334		
00:15			50		28			12:15			292		303		
00:30			45		35			12:30			310		306		
00:45			35	171	29	136	307	12:45			314	1231	276	1219	2450
01:00			45		30			13:00			289		287		
01:15			40		28			13:15			316		294		
01:30			25		26			13:30			275		297		
01:45			36	146	33	117	263	13:45			296	1176	285	1163	2339
02:00			41		32			14:00			286		289		
02:15			21		18			14:15			289		311		
02:30			19		13			14:30			263		267		
02:45			34	115	18	81	196	14:45			302	1140	274	1141	2281
03:00			27		20			15:00			269		285		
03:15			14		19			15:15			313		313		
03:30			11		14			15:30			292		308		
03:45			11	63	16	69	132	15:45			351	1225	317	1223	2448
04:00			21		16			16:00			308		301		
04:15			14		15			16:15			308		300		
04:30			19		23			16:30			364		326		
04:45			28	82	48	102	184	16:45			384	1364	333	1260	2624
05:00			31		36			17:00			344		345		
05:15			36		32			17:15			366		339		
05:30			43		67			17:30			403		297		
05:45			60	170	48	183	353	17:45			356	1469	311	1292	2761
06:00			48		62			18:00			397		359		
06:15			68		94			18:15			374		297		
06:30			76		102			18:30			377		275		
06:45			86	278	104	362	640	18:45			362	1510	285	1216	2726
07:00			118		101			19:00			376		248		
07:15			159		143			19:15			360		241		
07:30			230		213			19:30			314		211		
07:45			265	772	221	678	1450	19:45			265	1315	178	878	2193
08:00			274		227			20:00			287		164		
08:15			248		246			20:15			221		174		
08:30			250		262			20:30			204		165		
08:45			231	1003	260	995	1998	20:45			224	936	160	663	1599
09:00			173		238			21:00			226		155		
09:15			242		224			21:15			200		119		
09:30			221		261			21:30			133		122		
09:45			252	888	281	1004	1892	21:45			162	721	135	531	1252
10:00			227		287			22:00			125		108		
10:15			269		298			22:15			123		123		
10:30			275		293			22:30			136		106		
10:45			258	1029	296	1174	2203	22:45			115	499	81	418	917
11:00			274		291			23:00			113		92		
11:15			292		310			23:15			100		90		
11:30			288		344			23:30			95		82		
11:45			300	1154	332	1277	2431	23:45			84	392	86	350	742
Total Vol.			5871		6178		**12049**				12978		11354		**24332**

Daily Totals

NB	SB	EB	WB	Combined
		18849	17532	**36381**

	AM			PM		
Split %	48.7%	51.3%	**33.1%**	53.3%	46.7%	**66.9%**
Peak Hour	11:45	11:15	**11:15**	17:30	16:30	**17:15**
Volume	1217	1320	**2515**	1530	1343	**2828**
P.H.F.	0.97	0.96	**0.97**	0.95	0.97	**0.94**

Volumes for: Saturday, October 13, 2007 City: Westminster Project #: 07-1280-024

Location: Bolsa Ave btwn Bushard St & Brookhurst St

AM Period	NB	SB	EB		WB		
00:00			57		80		
00:15			80		71		
00:30			65		61		
00:45			47	249	55	267	516
01:00			66		54		
01:15			53		36		
01:30			33		32		
01:45			46	198	31	153	351
02:00			39		47		
02:15			38		48		
02:30			48		40		
02:45			36	161	37	172	333
03:00			57		30		
03:15			46		27		
03:30			16		23		
03:45			21	140	14	94	234
04:00			17		22		
04:15			20		25		
04:30			19		35		
04:45			13	69	38	120	189
05:00			27		32		
05:15			23		32		
05:30			33		43		
05:45			26	109	38	145	254
06:00			23		33		
06:15			27		51		
06:30			32		59		
06:45			40	122	60	203	325
07:00			45		72		
07:15			67		103		
07:30			93		112		
07:45			118	323	197	484	807
08:00			125		197		
08:15			166		209		
08:30			176		231		
08:45			217	684	260	897	1581
09:00			220		273		
09:15			251		282		
09:30			235		307		
09:45			309	1015	332	1194	2209
10:00			317		346		
10:15			302		372		
10:30			336		378		
10:45			401	1356	378	1474	2830
11:00			354		374		
11:15			371		370		
11:30			353		395		
11:45			401	1479	393	1532	3011
Total Vol.			5905		6735		**12640**

PM Period	NB	SB	EB		WB		
12:00			424		387		
12:15			450		393		
12:30			407		383		
12:45			432	1713	419	1582	3295
13:00			398		413		
13:15			452		403		
13:30			399		406		
13:45			374	1623	408	1630	3253
14:00			476		397		
14:15			433		347		
14:30			392		352		
14:45			393	1694	367	1463	3157
15:00			396		354		
15:15			395		329		
15:30			385		340		
15:45			373	1549	345	1368	2917
16:00			371		296		
16:15			348		307		
16:30			320		293		
16:45			365	1404	279	1175	2579
17:00			382		292		
17:15			392		294		
17:30			304		267		
17:45			315	1393	271	1124	2517
18:00			343		274		
18:15			358		271		
18:30			342		262		
18:45			344	1387	245	1052	2439
19:00			341		231		
19:15			340		208		
19:30			256		183		
19:45			279	1216	184	806	2022
20:00			274		186		
20:15			192		174		
20:30			214		169		
20:45			214	894	161	690	1584
21:00			214		143		
21:15			164		132		
21:30			145		113		
21:45			146	669	107	495	1164
22:00			154		111		
22:15			151		103		
22:30			96		78		
22:45			83	484	68	360	844
23:00			104		54		
23:15			80		54		
23:30			73		51		
23:45			68	325	54	213	538
			14351		11958		**26309**

Daily Totals

	NB	SB	EB	WB	Combined
			20256	18693	**38949**

	AM			PM		
Split %	46.7%	53.3%	**32.5%**	54.5%	45.5%	**67.5%**
Peak Hour	11:45	11:30	**11:45**	12:00	12:45	**12:45**
Volume	1682	1568	**3238**	1713	1641	**3322**
P.H.F.	0.93	0.99	**0.96**	0.95	0.98	**0.97**

Volumes for: Sunday, October 14, 2007 City: Westminster Project #: 07-1280-024

Location: Bolsa Ave btwn Bushard St & Brookhurst St

AM Period	NB	SB	EB		WB			PM Period	NB	SB	EB		WB		
00:00			62		51			12:00			357		379		
00:15			76		48			12:15			377		381		
00:30			43		44			12:30			438		388		
00:45			45	226	37	180	406	12:45			405	1577	421	1569	3146
01:00			49		36			13:00			379		419		
01:15			55		42			13:15			375		384		
01:30			42		39			13:30			383		380		
01:45			41	187	34	151	338	13:45			415	1552	386	1569	3121
02:00			53		41			14:00			366		374		
02:15			42		40			14:15			375		337		
02:30			55		33			14:30			382		328		
02:45			32	182	32	146	328	14:45			375	1498	340	1379	2877
03:00			23		34			15:00			409		337		
03:15			37		34			15:15			419		301		
03:30			38		28			15:30			362		300		
03:45			18	116	19	115	231	15:45			438	1628	306	1244	2872
04:00			17		12			16:00			312		293		
04:15			13		14			16:15			348		298		
04:30			18		15			16:30			366		291		
04:45			11	59	20	61	120	16:45			373	1399	287	1169	2568
05:00			17		20			17:00			364		265		
05:15			16		15			17:15			367		276		
05:30			15		18			17:30			366		263		
05:45			17	65	21	74	139	17:45			369	1466	256	1060	2526
06:00			18		26			18:00			365		254		
06:15			27		27			18:15			374		257		
06:30			17		30			18:30			327		234		
06:45			43	105	46	129	234	18:45			320	1386	239	984	2370
07:00			41		57			19:00			333		235		
07:15			42		69			19:15			300		192		
07:30			84		107			19:30			283		187		
07:45			114	281	141	374	655	19:45			267	1183	168	782	1965
08:00			129		170			20:00			183		166		
08:15			143		172			20:15			209		165		
08:30			148		201			20:30			167		158		
08:45			213	633	229	772	1405	20:45			193	752	126	615	1367
09:00			200		262			21:00			165		124		
09:15			260		280			21:15			133		100		
09:30			270		297			21:30			136		82		
09:45			297	1027	318	1157	2184	21:45			110	544	82	388	932
10:00			310		325			22:00			105		72		
10:15			270		323			22:15			77		59		
10:30			312		330			22:30			82		53		
10:45			334	1226	332	1310	2536	22:45			62	326	49	233	559
11:00			365		344			23:00			66		39		
11:15			368		350			23:15			42		39		
11:30			377		388			23:30			39		35		
11:45			368	1478	381	1463	2941	23:45			23	170	32	145	315
Total Vol.				5585		5932	**11517**					13481		11137	**24618**

Daily Totals

NB	SB	EB	WB	Combined
		19066	17069	**36135**

	AM			PM		
Split %	48.5%	51.5%	**31.9%**	54.8%	45.2%	**68.1%**
Peak Hour	11:45	11:30	**11:45**	15:00	12:30	**12:30**
Volume	1540	1529	**3069**	1628	1612	**3209**
P.H.F.	0.88	0.99	**0.93**	0.93	0.96	**0.97**

Volumes for: Monday, October 15, 2007 City: Westminster Project #: 07-1280-024

Location: Bolsa Ave btwn Bushard St & Brookhurst St

AM Period	NB	SB	EB		WB			PM Period	NB	SB	EB		WB		
00:00			36		37			12:00			325		317		
00:15			40		36			12:15			337		336		
00:30			31		22			12:30			352		310		
00:45			29	136	20	115	251	12:45			329	1343	320	1283	2626
01:00			25		21			13:00			327		324		
01:15			27		22			13:15			339		307		
01:30			24		22			13:30			331		321		
01:45			29	105	11	76	181	13:45			355	1352	335	1287	2639
02:00			26		8			14:00			356		310		
02:15			10		10			14:15			319		304		
02:30			12		14			14:30			318		303		
02:45			12	60	16	48	108	14:45			374	1367	320	1237	2604
03:00			20		8			15:00			308		320		
03:15			3		9			15:15			346		323		
03:30			10		17			15:30			314		334		
03:45			11	44	18	52	96	15:45			380	1348	341	1318	2666
04:00			7		17			16:00			402		341		
04:15			15		27			16:15			330		322		
04:30			15		39			16:30			347		318		
04:45			25	62	34	117	179	16:45			354	1433	334	1315	2748
05:00			32		37			17:00			313		340		
05:15			33		49			17:15			348		346		
05:30			39		59			17:30			376		299		
05:45			39	143	60	205	348	17:45			326	1363	300	1285	2648
06:00			53		60			18:00			352		298		
06:15			78		93			18:15			303		262		
06:30			78		115			18:30			304		221		
06:45			98	307	111	379	686	18:45			295	1254	212	993	2247
07:00			108		95			19:00			293		189		
07:15			150		142			19:15			261		173		
07:30			177		166			19:30			192		150		
07:45			193	628	170	573	1201	19:45			186	932	140	652	1584
08:00			214		206			20:00			180		125		
08:15			224		222			20:15			158		120		
08:30			218		226			20:30			128		114		
08:45			231	887	238	892	1779	20:45			145	611	103	462	1073
09:00			191		248			21:00			156		95		
09:15			193		249			21:15			121		84		
09:30			212		263			21:30			122		67		
09:45			241	837	294	1054	1891	21:45			93	492	58	304	796
10:00			259		297			22:00			86		76		
10:15			270		271			22:15			89		61		
10:30			266		301			22:30			66		61		
10:45			283	1078	306	1175	2253	22:45			65	306	45	243	549
11:00			303		306			23:00			59		51		
11:15			316		343			23:15			57		43		
11:30			304		340			23:30			47		34		
11:45			304	1227	346	1335	2562	23:45			48	211	34	162	373
Total Vol.				5514		6021	**11535**					12012		10541	**22553**

Daily Totals

NB	SB	EB	WB	Combined
		17526	16562	**34088**

	AM			PM		
Split %	47.8%	52.2%	**33.8%**	53.3%	46.7%	**66.2%**
Peak Hour	11:45	11:15	**11:45**	15:45	15:15	**15:15**
Volume	1318	1346	**2627**	1459	1339	**2781**
P.H.F.	0.94	0.97	**0.98**	0.91	0.98	**0.94**

Volumes for: Wednesday, October 10, 2007 City: Westminster Project #: 07-1280-023

Location: Bolsa Ave btwn Moran & Bushard St

AM Period	NB	SB	EB		WB			PM Period	NB	SB	EB		WB		
00:00			37		43			12:00			298		305		
00:15			30		22			12:15			279		323		
00:30			35		24			12:30			264		311		
00:45			22	124	23	112	236	12:45			274	1115	318	1257	2372
01:00			32		20			13:00			251		318		
01:15			21		26			13:15			285		298		
01:30			16		27			13:30			271		309		
01:45			14	83	18	91	174	13:45			274	1081	280	1205	2286
02:00			18		12			14:00			291		259		
02:15			19		10			14:15			253		262		
02:30			11		15			14:30			230		264		
02:45			6	54	8	45	99	14:45			284	1058	263	1048	2106
03:00			9		7			15:00			279		319		
03:15			3		13			15:15			291		267		
03:30			6		11			15:30			242		332		
03:45			7	25	11	42	67	15:45			289	1101	291	1209	2310
04:00			5		20			16:00			271		301		
04:15			7		28			16:15			299		323		
04:30			21		29			16:30			274		280		
04:45			15	48	36	113	161	16:45			309	1153	281	1185	2338
05:00			33		42			17:00			301		283		
05:15			27		38			17:15			307		291		
05:30			30		50			17:30			269		323		
05:45			32	122	73	203	325	17:45			270	1147	328	1225	2372
06:00			36		60			18:00			347		301		
06:15			44		75			18:15			290		329		
06:30			57		98			18:30			280		307		
06:45			61	198	116	349	547	18:45			221	1138	289	1226	2364
07:00			73		94			19:00			277		247		
07:15			118		130			19:15			247		219		
07:30			124		169			19:30			194		189		
07:45			166	481	206	599	1080	19:45			198	916	164	819	1735
08:00			201		240			20:00			157		150		
08:15			187		209			20:15			152		139		
08:30			193		246			20:30			150		128		
08:45			224	805	206	901	1706	20:45			136	595	129	546	1141
09:00			190		285			21:00			153		137		
09:15			208		248			21:15			125		119		
09:30			198		279			21:30			138		106		
09:45			235	831	283	1095	1926	21:45			99	515	103	465	980
10:00			265		310			22:00			87		85		
10:15			260		305			22:15			78		87		
10:30			281		317			22:30			74		85		
10:45			295	1101	316	1248	2349	22:45			53	292	60	317	609
11:00			284		299			23:00			46		59		
11:15			268		301			23:15			56		41		
11:30			287		344			23:30			36		44		
11:45			327	1166	316	1260	2426	23:45			62	200	33	177	377
Total Vol.				5038		6058	**11096**					10311		10679	**20990**

Daily Totals

NB	SB	EB	WB	Combined
		15349	16737	**32086**

	AM			PM		
Split %	45.4%	54.6%	**34.6%**	49.1%	50.9%	**65.4%**
Peak Hour	11:30	11:30	**11:30**	17:15	17:30	**17:30**
Volume	1191	1288	**2479**	1193	1281	**2457**
P.H.F.	0.91	0.94	**0.96**	0.86	0.97	**0.95**

Volumes for: Thursday, October 11, 2007 City: Westminster Project #: 07-1280-030

Location: McFadden Ave btwn Bushard St & Brookhurst St

AM Period	NB	SB	EB		WB			PM Period	NB	SB	EB		WB		
00:00			40		28			12:00			127		150		
00:15			35		33			12:15			136		161		
00:30			19		24			12:30			118		140		
00:45			18	112	16	101	213	12:45			115	496	149	600	1096
01:00			18		12			13:00			127		139		
01:15			20		12			13:15			99		150		
01:30			21		14			13:30			134		149		
01:45			21	80	8	46	126	13:45			117	477	106	544	1021
02:00			24		11			14:00			156		152		
02:15			20		14			14:15			155		202		
02:30			17		14			14:30			144		228		
02:45			18	79	10	49	128	14:45			202	657	233	815	1472
03:00			20		13			15:00			153		229		
03:15			5		9			15:15			159		160		
03:30			7		10			15:30			152		189		
03:45			10	42	13	45	87	15:45			184	648	212	790	1438
04:00			13		23			16:00			163		217		
04:15			25		26			16:15			160		215		
04:30			25		31			16:30			157		199		
04:45			32	95	30	110	205	16:45			210	690	246	877	1567
05:00			38		34			17:00			183		234		
05:15			63		78			17:15			197		249		
05:30			64		73			17:30			220		299		
05:45			54	219	56	241	460	17:45			165	765	220	1002	1767
06:00			56		56			18:00			190		258		
06:15			85		102			18:15			197		224		
06:30			111		106			18:30			155		219		
06:45			108	360	99	363	723	18:45			154	696	197	898	1594
07:00			173		115			19:00			176		169		
07:15			232		138			19:15			125		161		
07:30			236		192			19:30			146		135		
07:45			203	844	240	685	1529	19:45			145	592	141	606	1198
08:00			216		226			20:00			136		108		
08:15			192		226			20:15			95		99		
08:30			176		144			20:30			82		98		
08:45			160	744	126	722	1466	20:45			116	429	106	411	840
09:00			149		126			21:00			92		96		
09:15			114		129			21:15			86		90		
09:30			142		133			21:30			112		82		
09:45			117	522	134	522	1044	21:45			77	367	49	317	684
10:00			114		153			22:00			82		79		
10:15			122		133			22:15			56		65		
10:30			102		134			22:30			54		50		
10:45			113	451	139	559	1010	22:45			44	236	54	248	484
11:00			119		137			23:00			54		46		
11:15			123		137			23:15			37		32		
11:30			125		131			23:30			43		29		
11:45			140	507	146	551	1058	23:45			43	177	25	132	309
Total Vol.			4055		3994		**8049**				6230		7240		**13470**

Daily Totals

	NB	SB	EB	WB	Combined
			10285	11234	**21519**
			PM		
			46.3%	53.7%	**62.6%**
			16:45	16:45	**16:45**
			810	1028	**1838**
			0.92	0.86	**0.89**

	AM			PM		
Split %	50.4%	49.6%	**37.4%**	46.3%	53.7%	**62.6%**
Peak Hour	07:15	07:30	**07:30**	16:45	16:45	**16:45**
Volume	887	884	**1731**	810	1028	**1838**
P.H.F.	0.94	0.92	**0.98**	0.92	0.86	**0.89**

Volumes for: Friday, October 12, 2007 City: Westminster Project #: 07-1280-030

Location: McFadden Ave btwn Bushard St & Brookhurst St

AM Period	NB	SB	EB		WB		
00:00			40		24		
00:15			44		34		
00:30			27		24		
00:45			18	129	23	105	234
01:00			18		16		
01:15			18		11		
01:30			22		15		
01:45			21	79	5	47	126
02:00			10		9		
02:15			24		14		
02:30			19		19		
02:45			16	69	6	48	117
03:00			20		15		
03:15			13		4		
03:30			5		10		
03:45			7	45	10	39	84
04:00			11		13		
04:15			25		25		
04:30			25		29		
04:45			24	85	40	107	192
05:00			33		28		
05:15			40		40		
05:30			66		79		
05:45			58	197	65	212	409
06:00			40		49		
06:15			60		63		
06:30			113		104		
06:45			109	322	108	324	646
07:00			107		93		
07:15			174		126		
07:30			241		172		
07:45			193	715	197	588	1303
08:00			226		260		
08:15			195		226		
08:30			182		145		
08:45			164	767	140	771	1538
09:00			155		125		
09:15			107		126		
09:30			142		133		
09:45			147	551	131	515	1066
10:00			117		126		
10:15			131		129		
10:30			142		119		
10:45			145	535	121	495	1030
11:00			141		109		
11:15			113		136		
11:30			151		128		
11:45			138	543	118	491	1034
Total Vol.			4037		3742		**7779**

PM Period	NB	SB	EB		WB		
12:00			138		145		
12:15			168		147		
12:30			145		143		
12:45			133	584	149	584	1168
13:00			109		163		
13:15			150		162		
13:30			113		146		
13:45			128	500	126	597	1097
14:00			166		150		
14:15			158		179		
14:30			177		195		
14:45			236	737	202	726	1463
15:00			172		217		
15:15			192		232		
15:30			153		228		
15:45			235	752	219	896	1648
16:00			166		232		
16:15			190		227		
16:30			198		209		
16:45			196	750	232	900	1650
17:00			190		237		
17:15			219		250		
17:30			235		237		
17:45			212	856	238	962	1818
18:00			193		248		
18:15			228		247		
18:30			203		214		
18:45			205	829	222	931	1760
19:00			201		210		
19:15			165		169		
19:30			170		140		
19:45			136	672	136	655	1327
20:00			141		131		
20:15			145		134		
20:30			132		119		
20:45			107	525	102	486	1011
21:00			112		115		
21:15			132		92		
21:30			113		82		
21:45			122	479	79	368	847
22:00			79		61		
22:15			125		104		
22:30			64		100		
22:45			58	326	61	326	652
23:00			77		65		
23:15			77		54		
23:30			48		65		
23:45			48	250	51	235	485
			7260		7666		**14926**

Daily Totals

NB	SB	EB	WB	Combined
		11297	11408	**22705**

	AM			PM		
Split %	51.9%	48.1%	**34.3%**	48.6%	51.4%	**65.7%**
Peak Hour	07:30	07:30	**07:30**	17:30	17:15	**17:30**
Volume	855	855	**1710**	868	973	**1838**
P.H.F.	0.89	0.82	**0.88**	0.92	0.97	**0.97**

Volumes for: Saturday, October 13, 2007 City: Westminster Project #: 07-1280-030

Location: McFadden Ave btwn Bushard St & Brookhurst St

AM Period	NB	SB	EB		WB			PM Period	NB	SB	EB		WB		
00:00			36		37			12:00			221		230		
00:15			52		38			12:15			210		225		
00:30			47		23			12:30			171		218		
00:45			32	167	24	122	289	12:45			201	803	189	862	1665
01:00			21		23			13:00			175		182		
01:15			24		25			13:15			173		193		
01:30			16		12			13:30			176		186		
01:45			26	87	16	76	163	13:45			221	745	211	772	1517
02:00			18		18			14:00			192		193		
02:15			15		13			14:15			191		166		
02:30			16		9			14:30			175		165		
02:45			23	72	11	51	123	14:45			151	709	168	692	1401
03:00			12		9			15:00			194		172		
03:15			11		3			15:15			156		161		
03:30			7		13			15:30			211		175		
03:45			11	41	7	32	73	15:45			170	731	161	669	1400
04:00			10		14			16:00			157		148		
04:15			16		18			16:15			167		170		
04:30			9		35			16:30			176		147		
04:45			14	49	18	85	134	16:45			168	668	187	652	1320
05:00			16		17			17:00			153		191		
05:15			32		26			17:15			152		147		
05:30			43		30			17:30			177		146		
05:45			21	112	24	97	209	17:45			136	618	144	628	1246
06:00			26		22			18:00			167		148		
06:15			32		29			18:15			174		159		
06:30			37		31			18:30			202		191		
06:45			42	137	37	119	256	18:45			211	754	167	665	1419
07:00			49		45			19:00			146		142		
07:15			40		63			19:15			188		158		
07:30			71		64			19:30			160		123		
07:45			79	239	98	270	509	19:45			117	611	134	557	1168
08:00			91		84			20:00			123		129		
08:15			103		103			20:15			125		117		
08:30			172		136			20:30			93		104		
08:45			170	536	138	461	997	20:45			87	428	99	449	877
09:00			178		141			21:00			83		97		
09:15			144		130			21:15			104		95		
09:30			160		143			21:30			86		70		
09:45			151	633	150	564	1197	21:45			100	373	77	339	712
10:00			171		151			22:00			86		76		
10:15			182		158			22:15			72		74		
10:30			204		177			22:30			62		42		
10:45			214	771	183	669	1440	22:45			91	311	68	260	571
11:00			197		222			23:00			69		58		
11:15			182		208			23:15			40		26		
11:30			206		217			23:30			55		44		
11:45			195	780	197	844	1624	23:45			55	219	47	175	394
Total Vol.			3624		3390		**7014**				6970		6720		**13690**

Daily Totals

	NB	SB	EB	WB	Combined
			10594	10110	**20704**
			AM		**PM**
Split %			51.7%	48.3% **33.9%**	50.9% 49.1% **66.1%**
Peak Hour			11:30	11:45 **11:30**	12:00 12:00 **12:00**
Volume			832	870 **1701**	803 862 **1665**
P.H.F.			0.94	0.95 **0.94**	0.91 0.94 **0.92**

Volumes for: Sunday, October 14, 2007 City: Westminster Project #: 07-1280-030

Location: McFadden Ave btwn Bushard St & Brookhurst St

AM Period	NB	SB	EB		WB			PM Period	NB	SB	EB		WB		
00:00			47		49			12:00			215		220		
00:15			34		33			12:15			199		221		
00:30			45		24			12:30			172		222		
00:45			32	158	27	133	291	12:45			196	782	188	851	1633
01:00			49		17			13:00			204		188		
01:15			43		24			13:15			174		184		
01:30			30		26			13:30			186		190		
01:45			36	158	19	86	244	13:45			177	741	196	758	1499
02:00			27		18			14:00			172		183		
02:15			23		20			14:15			200		200		
02:30			38		15			14:30			173		174		
02:45			21	109	14	67	176	14:45			178	723	172	729	1452
03:00			9		10			15:00			172		147		
03:15			7		10			15:15			209		162		
03:30			14		10			15:30			197		148		
03:45			13	43	3	33	76	15:45			189	767	153	610	1377
04:00			18		8			16:00			170		158		
04:15			10		3			16:15			159		158		
04:30			19		15			16:30			150		153		
04:45			10	57	10	36	93	16:45			192	671	185	654	1325
05:00			6		9			17:00			175		179		
05:15			14		20			17:15			150		141		
05:30			17		20			17:30			174		123		
05:45			22	59	17	66	125	17:45			167	666	158	601	1267
06:00			56		25			18:00			148		128		
06:15			40		19			18:15			144		161		
06:30			40		17			18:30			180		151		
06:45			33	169	22	83	252	18:45			169	641	171	611	1252
07:00			39		29			19:00			158		131		
07:15			60		45			19:15			126		106		
07:30			89		102			19:30			110		94		
07:45			132	320	116	292	612	19:45			119	513	115	446	959
08:00			103		97			20:00			101		114		
08:15			121		114			20:15			107		87		
08:30			99		80			20:30			109		91		
08:45			141	464	161	452	916	20:45			98	415	67	359	774
09:00			150		154			21:00			92		101		
09:15			168		191			21:15			86		57		
09:30			175		182			21:30			61		63		
09:45			174	667	196	723	1390	21:45			82	321	56	277	598
10:00			146		160			22:00			64		52		
10:15			185		190			22:15			66		65		
10:30			174		184			22:30			42		55		
10:45			160	665	186	720	1385	22:45			57	229	31	203	432
11:00			175		188			23:00			29		39		
11:15			170		170			23:15			40		36		
11:30			168		219			23:30			20		25		
11:45			165	678	217	794	1472	23:45			22	111	29	129	240
Total Vol.			3547		3485		**7032**				6580		6228		**12808**

Daily Totals

	NB	SB	EB	WB	Combined
			10127	9713	**19840**
			AM		
Split %			50.4%	49.6%	**35.4%**
			PM		
			51.4%	48.6%	**64.6%**
Peak Hour			11:45	11:45	**11:45**
			12:00	12:00	**12:00**
Volume			751	880	**1631**
			782	851	**1633**
P.H.F.			0.87	0.99	**0.94**
			0.91	0.96	**0.94**

Volumes for: Monday, October 15, 2007 City: Westminster Project #: 07-1280-030

Location: McFadden Ave btwn Bushard St & Brookhurst St

AM Period	NB	SB	EB		WB			PM Period	NB	SB	EB		WB		
00:00			17		21			12:00			188		171		
00:15			31		22			12:15			161		172		
00:30			23		9			12:30			178		165		
00:45			13	84	9	61	145	12:45			175	702	168	676	1378
01:00			17		8			13:00			147		165		
01:15			17		11			13:15			169		166		
01:30			8		8			13:30			169		160		
01:45			5	47	3	30	77	13:45			169	654	151	642	1296
02:00			5		3			14:00			151		152		
02:15			6		2			14:15			189		159		
02:30			6		5			14:30			208		220		
02:45			3	20	6	16	36	14:45			239	787	217	748	1535
03:00			7		2			15:00			208		227		
03:15			5		1			15:15			205		223		
03:30			7		11			15:30			223		205		
03:45			6	25	13	27	52	15:45			232	868	196	851	1719
04:00			12		9			16:00			203		189		
04:15			15		13			16:15			233		211		
04:30			20		33			16:30			240		188		
04:45			14	61	31	86	147	16:45			257	933	240	828	1761
05:00			42		27			17:00			208		219		
05:15			56		32			17:15			217		249		
05:30			61		83			17:30			211		240		
05:45			49	208	47	189	397	17:45			195	831	253	961	1792
06:00			31		52			18:00			215		253		
06:15			83		64			18:15			185		188		
06:30			97		85			18:30			178		171		
06:45			121	332	124	325	657	18:45			152	730	144	756	1486
07:00			131		83			19:00			141		101		
07:15			167		107			19:15			144		126		
07:30			230		184			19:30			124		94		
07:45			193	721	207	581	1302	19:45			146	555	112	433	988
08:00			188		203			20:00			124		106		
08:15			213		195			20:15			116		100		
08:30			146		125			20:30			97		63		
08:45			151	698	130	653	1351	20:45			107	444	93	362	806
09:00			131		105			21:00			88		88		
09:15			137		164			21:15			89		66		
09:30			148		119			21:30			90		57		
09:45			137	553	147	535	1088	21:45			79	346	59	270	616
10:00			165		136			22:00			71		63		
10:15			141		144			22:15			54		54		
10:30			145		121			22:30			45		34		
10:45			164	615	139	540	1155	22:45			54	224	44	195	419
11:00			153		129			23:00			37		26		
11:15			164		137			23:15			41		30		
11:30			141		148			23:30			47		23		
11:45			154	612	157	571	1183	23:45			35	160	21	100	260
Total Vol.			3976		3614		**7590**				7234		6822		**14056**

	AM			PM		
Daily Totals	NB	SB	EB	WB	Combined	
			11210	10436	**21646**	
Split %	52.4%	47.6%	**35.1%**	51.5%	48.5%	**64.9%**
Peak Hour	07:30	07:30	**07:30**	16:15	17:15	**16:45**
Volume	824	789	**1613**	938	995	**1841**
P.H.F.	0.90	0.95	**0.97**	0.91	0.98	**0.93**

Volumes for: Tuesday, October 16, 2007 City: Westminster Project #: 07-1280-030

Location: McFadden Ave btwn Bushard St & Brookhurst St

AM Period	NB	SB	EB		WB			PM Period	NB	SB	EB		WB		
00:00			26		21			12:00			166		145		
00:15			20		29			12:15			167		143		
00:30			13		14			12:30			133		144		
00:45			14	73	15	79	152	12:45			113	579	150	582	1161
01:00			10		5			13:00			138		162		
01:15			20		6			13:15			140		150		
01:30			22		10			13:30			117		138		
01:45			16	68	5	26	94	13:45			152	547	142	592	1139
02:00			15		9			14:00			165		166		
02:15			15		5			14:15			175		188		
02:30			7		2			14:30			206		195		
02:45			8	45	3	19	64	14:45			220	766	205	754	1520
03:00			10		7			15:00			186		226		
03:15			12		6			15:15			183		228		
03:30			14		12			15:30			180		220		
03:45			6	42	12	37	79	15:45			224	773	229	903	1676
04:00			11		8			16:00			171		232		
04:15			26		11			16:15			195		227		
04:30			50		49			16:30			197		222		
04:45			21	108	35	103	211	16:45			194	757	235	916	1673
05:00			32		32			17:00			217		241		
05:15			49		47			17:15			233		241		
05:30			64		73			17:30			226		237		
05:45			76	221	62	214	435	17:45			207	883	242	961	1844
06:00			39		39			18:00			195		247		
06:15			83		67			18:15			205		242		
06:30			130		102			18:30			204		214		
06:45			166	418	126	334	752	18:45			204	808	212	915	1723
07:00			143		103			19:00			172		203		
07:15			207		127			19:15			169		143		
07:30			264		190			19:30			144		136		
07:45			224	838	214	634	1472	19:45			138	623	136	618	1241
08:00			209		243			20:00			143		131		
08:15			201		197			20:15			145		125		
08:30			170		149			20:30			124		105		
08:45			171	751	152	741	1492	20:45			107	519	112	473	992
09:00			171		122			21:00			116		101		
09:15			148		114			21:15			114		82		
09:30			136		137			21:30			118		79		
09:45			138	593	127	500	1093	21:45			113	461	79	341	802
10:00			121		126			22:00			107		94		
10:15			139		127			22:15			90		104		
10:30			143		119			22:30			61		93		
10:45			141	544	111	483	1027	22:45			69	327	62	353	680
11:00			122		129			23:00			77		60		
11:15			139		133			23:15			70		55		
11:30			141		123			23:30			48		63		
11:45			150	552	124	509	1061	23:45			48	243	60	238	481
Total Vol.			4253		3679		**7932**				7286		7646		**14932**

Daily Totals

NB	SB	EB	WB	Combined
		11539	11325	**22864**

	AM			PM		
Split %	53.6%	46.4%	**34.7%**	48.8%	51.2%	**65.3%**
Peak Hour	07:15	07:30	**07:30**	17:00	17:30	**17:00**
Volume	904	844	**1742**	883	968	**1844**
P.H.F.	0.86	0.87	**0.96**	0.95	0.98	**0.97**

City:

Project #:

Location:

AM Period	NB	SB	EB		WB			PM Period	NB	SB	EB		WB		
00:00			35		30			12:00			131		152		
00:15			27		28			12:15			118		154		
00:30			19		23			12:30			116		147		
00:45			18	99	12	93	192	12:45			127	492	140	593	1085
01:00			19		12			13:00			124		150		
01:15			21		14			13:15			111		150		
01:30			21		9			13:30			128		138		
01:45			24	85	8	43	128	13:45			156	519	135	573	1092
02:00			24		12			14:00			156		173		
02:15			20		14			14:15			153		207		
02:30			18		12			14:30			167		232		
02:45			20	82	12	50	132	14:45			156	632	229	841	1473
03:00			15		9			15:00			157		218		
03:15			7		10			15:15			152		168		
03:30			10		11			15:30			164		190		
03:45			12	44	19	49	93	15:45			177	650	212	788	1438
04:00			23		26			16:00			161		217		
04:15			25		28			16:15			158		201		
04:30			25		30			16:30			177		204		
04:45			32	105	31	115	220	16:45			190	686	235	857	1543
05:00			46		41			17:00			193		245		
05:15			63		75			17:15			205		274		
05:30			56		70			17:30			167		227		
05:45			54	219	56	242	461	17:45			183	748	254	1000	1748
06:00			82		102			18:00			196		228		
06:15			90		103			18:15			192		221		
06:30			109		103			18:30			154		198		
06:45			132	413	102	410	823	18:45			175	717	171	818	1535
07:00			192		131			19:00			139		168		
07:15			236		160			19:15			126		136		
07:30			236		205			19:30			145		140		
07:45			210	874	228	724	1598	19:45			144	554	111	555	1109
08:00			212		226			20:00			121		106		
08:15			180		190			20:15			94		99		
08:30			165		136			20:30			88		101		
08:45			153	710	126	678	1388	20:45			94	397	102	408	805
09:00			119		128			21:00			86		95		
09:15			127		129			21:15			103		84		
09:30			137		134			21:30			111		52		
09:45			117	500	142	533	1033	21:45			77	377	75	306	683
10:00			116		135			22:00			81		68		
10:15			105		133			22:15			54		51		
10:30			102		139			22:30			51		54		
10:45			114	437	137	544	981	22:45			48	234	51	224	458
11:00			119		137			23:00			49		40		
11:15			124		133			23:15			43		31		
11:30			132		144			23:30			43		27		
11:45			139	514	141	555	1069	23:45			43	178	27	125	303
Total Vol.			4082		4036		**8118**				6184		7088		**13272**

Daily Totals

	NB	SB	EB	WB	Combined
			10266	11124	**21390**
Split %			46.6%	53.4%	**62.0%**

	AM			PM		
Peak Hour	07:15	07:30	**07:15**	16:30	17:00	**17:00**
Volume	894	849	**1713**	765	1000	**1748**
P.H.F.	0.95	0.93	**0.97**	0.93	0.91	**0.91**

Volumes for: Sunday, October 14, 2007 City: Westminster Project #: 07-1280-028

Location: McFadden Ave btwn Newland St & Magnolia St

AM Period	NB	SB	EB		WB		
00:00			39		38		
00:15			36		34		
00:30			30		24		
00:45			21	126	26	122	248
01:00			25		20		
01:15			18		24		
01:30			24		20		
01:45			17	84	25	89	173
02:00			15		18		
02:15			27		19		
02:30			22		19		
02:45			13	77	12	68	145
03:00			5		6		
03:15			12		13		
03:30			9		10		
03:45			7	33	7	36	69
04:00			10		7		
04:15			9		7		
04:30			6		12		
04:45			11	36	14	40	76
05:00			10		14		
05:15			11		14		
05:30			12		23		
05:45			26	59	29	80	139
06:00			31		27		
06:15			33		30		
06:30			23		29		
06:45			26	113	36	122	235
07:00			34		45		
07:15			27		52		
07:30			47		74		
07:45			81	189	90	261	450
08:00			50		83		
08:15			63		97		
08:30			97		112		
08:45			100	310	139	431	741
09:00			129		146		
09:15			142		171		
09:30			148		190		
09:45			151	570	205	712	1282
10:00			163		187		
10:15			152		194		
10:30			180		216		
10:45			163	658	206	803	1461
11:00			147		186		
11:15			151		181		
11:30			175		203		
11:45			188	661	214	784	1445
Total Vol.			2916		3548		**6464**

PM Period	NB	SB	EB		WB		
12:00			172		207		
12:15			187		215		
12:30			181		203		
12:45			179	719	202	827	1546
13:00			176		216		
13:15			166		204		
13:30			171		213		
13:45			183	696	206	839	1535
14:00			163		187		
14:15			146		176		
14:30			164		189		
14:45			156	629	181	733	1362
15:00			224		204		
15:15			172		183		
15:30			167		170		
15:45			168	731	174	731	1462
16:00			167		168		
16:15			155		167		
16:30			145		154		
16:45			155	622	166	655	1277
17:00			132		165		
17:15			135		137		
17:30			147		170		
17:45			149	563	170	642	1205
18:00			129		157		
18:15			168		178		
18:30			139		162		
18:45			125	561	149	646	1207
19:00			141		136		
19:15			135		131		
19:30			90		96		
19:45			88	454	116	479	933
20:00			99		107		
20:15			89		99		
20:30			78		95		
20:45			77	343	90	391	734
21:00			77		88		
21:15			69		68		
21:30			68		67		
21:45			63	277	50	273	550
22:00			49		53		
22:15			29		53		
22:30			46		43		
22:45			39	163	46	195	358
23:00			34		33		
23:15			30		31		
23:30			16		23		
23:45			18	98	17	104	202
			5856		6515		**12371**

Daily Totals

NB	SB	EB	WB	Combined
		8772	10063	**18835**

	AM			PM		
Split %	45.1%	54.9%	**34.3%**	47.3%	52.7%	**65.7%**
Peak Hour	11:45	11:30	**11:45**	15:00	13:00	**12:15**
Volume	728	839	**1567**	731	839	**1559**
P.H.F.	0.97	0.98	**0.97**	0.82	0.97	**0.97**

Volumes for: Monday, October 15, 2007 City: Westminster Project #: 07-1280-028

Location: McFadden Ave btwn Newland St & Magnolia St

AM Period	NB	SB	EB		WB			PM Period	NB	SB	EB		WB		
00:00			12		18			12:00			124		147		
00:15			11		13			12:15			140		149		
00:30			12		12			12:30			155		157		
00:45			9	44	10	53	97	12:45			166	585	171	624	1209
01:00			12		12			13:00			143		148		
01:15			11		9			13:15			128		133		
01:30			6		8			13:30			144		140		
01:45			5	34	5	34	68	13:45			146	561	145	566	1127
02:00			6		5			14:00			153		148		
02:15			9		7			14:15			184		167		
02:30			7		8			14:30			227		187		
02:45			6	28	7	27	55	14:45			201	765	187	689	1454
03:00			11		5			15:00			164		179		
03:15			9		7			15:15			200		190		
03:30			5		13			15:30			223		203		
03:45			10	35	14	39	74	15:45			225	812	182	754	1566
04:00			15		13			16:00			201		188		
04:15			20		19			16:15			220		197		
04:30			27		43			16:30			227		192		
04:45			20	82	30	105	187	16:45			223	871	217	794	1665
05:00			28		37			17:00			215		187		
05:15			48		54			17:15			205		239		
05:30			51		82			17:30			186		215		
05:45			40	167	48	221	388	17:45			186	792	201	842	1634
06:00			45		54			18:00			184		192		
06:15			72		76			18:15			162		168		
06:30			107		115			18:30			178		169		
06:45			119	343	131	376	719	18:45			130	654	145	674	1328
07:00			175		151			19:00			149		132		
07:15			198		176			19:15			116		118		
07:30			203		212			19:30			106		121		
07:45			199	775	193	732	1507	19:45			137	508	118	489	997
08:00			210		192			20:00			119		99		
08:15			182		170			20:15			86		82		
08:30			185		170			20:30			91		81		
08:45			145	722	140	672	1394	20:45			86	382	76	338	720
09:00			118		152			21:00			92		81		
09:15			124		143			21:15			98		84		
09:30			142		148			21:30			81		60		
09:45			103	487	138	581	1068	21:45			66	337	55	280	617
10:00			156		135			22:00			54		51		
10:15			99		112			22:15			44		48		
10:30			133		129			22:30			50		37		
10:45			121	509	127	503	1012	22:45			57	205	35	171	376
11:00			136		131			23:00			30		28		
11:15			129		128			23:15			24		23		
11:30			117		140			23:30			21		24		
11:45			139	521	150	549	1070	23:45			20	95	16	91	186
Total Vol.			3747		3892		**7639**				6567		6312		**12879**

Daily Totals

NB	SB	EB	WB	Combined
		10314	10204	**20518**

	AM			PM		
Split %	49.1%	50.9%	**37.2%**	51.0%	49.0%	**62.8%**
eak Hour	07:15	07:15	**07:15**	16:15	16:45	**16:30**
Volume	810	773	**1583**	885	858	**1705**
P.H.F.	0.96	0.91	**0.95**	0.97	0.90	**0.96**

Volumes for: Tuesday, October 16, 2007 City: Westminster Project #: 07-1280-028

Location: McFadden Ave btwn Newland St & Magnolia St

AM Period	NB	SB	EB		WB			PM Period	NB	SB	EB		WB		
00:00			19		23			12:00			131		140		
00:15			23		25			12:15			132		129		
00:30			12		14			12:30			109		120		
00:45			12	66	12	74	140	12:45			143	515	142	531	1046
01:00			14		11			13:00			98		128		
01:15			22		16			13:15			114		131		
01:30			6		8			13:30			128		142		
01:45			8	50	8	43	93	13:45			141	481	126	527	1008
02:00			9		8			14:00			129		143		
02:15			13		6			14:15			151		159		
02:30			6		4			14:30			217		185		
02:45			8	36	7	25	61	14:45			176	673	168	655	1328
03:00			10		9			15:00			136		161		
03:15			10		10			15:15			125		176		
03:30			5		11			15:30			208		203		
03:45			12	37	17	47	84	15:45			195	664	193	733	1397
04:00			7		8			16:00			216		199		
04:15			18		21			16:15			194		184		
04:30			23		44			16:30			217		218		
04:45			22	70	39	112	182	16:45			210	837	208	809	1646
05:00			23		40			17:00			209		207		
05:15			40		59			17:15			180		198		
05:30			48		83			17:30			190		233		
05:45			30	141	56	238	379	17:45			180	759	226	864	1623
06:00			38		54			18:00			185		209		
06:15			67		87			18:15			157		207		
06:30			118		126			18:30			172		196		
06:45			118	341	139	406	747	18:45			159	673	153	765	1438
07:00			146		132			19:00			150		146		
07:15			186		180			19:15			126		136		
07:30			173		225			19:30			110		123		
07:45			168	673	185	722	1395	19:45			136	522	123	528	1050
08:00			214		237			20:00			114		118		
08:15			202		188			20:15			116		96		
08:30			157		175			20:30			101		90		
08:45			182	755	197	797	1552	20:45			76	407	88	392	799
09:00			128		165			21:00			117		102		
09:15			116		136			21:15			88		74		
09:30			106		125			21:30			85		66		
09:45			115	465	133	559	1024	21:45			73	363	65	307	670
10:00			110		139			22:00			70		64		
10:15			103		119			22:15			50		40		
10:30			118		137			22:30			49		43		
10:45			108	439	123	518	957	22:45			37	206	36	183	389
11:00			82		120			23:00			49		36		
11:15			90		133			23:15			23		23		
11:30			100		132			23:30			30		21		
11:45			110	382	139	524	906	23:45			31	133	25	105	238
Total Vol.				3455		4065	**7520**					6233		6399	**12632**

Daily Totals

	NB	SB	EB	WB	Combined
			9688	10464	**20152**

	AM			PM		
Split %	45.9%	54.1%	**37.3%**	49.3%	50.7%	**62.7%**
Peak Hour	07:30	07:30	**07:30**	16:00	17:30	**16:15**
Volume	757	835	**1592**	837	875	**1647**
P.H.F.	0.88	0.88	**0.88**	0.96	0.94	**0.95**

Volumes for: Wednesday, October 17, 2007 City: Westminster Project #: 07-1280-028

Location: McFadden Ave btwn Newland St & Magnolia St

AM Period	NB	SB	EB		WB			PM Period	NB	SB	EB		WB		
00:00			17		20			12:00			119		144		
00:15			18		23			12:15			109		139		
00:30			15		17			12:30			118		143		
00:45			14	64	16	76	140	12:45			150	496	135	561	1057
01:00			12		12			13:00			131		146		
01:15			22		14			13:15			136		140		
01:30			6		8			13:30			121		146		
01:45			14	54	8	42	96	13:45			120	508	139	571	1079
02:00			9		8			14:00			142		149		
02:15			17		12			14:15			173		156		
02:30			6		5			14:30			197		193		
02:45			7	39	7	32	71	14:45			150	662	151	649	1311
03:00			13		8			15:00			170		182		
03:15			9		9			15:15			150		169		
03:30			12		17			15:30			169		196		
03:45			10	44	17	51	95	15:45			198	687	189	736	1423
04:00			12		12			16:00			172		180		
04:15			22		23			16:15			187		203		
04:30			22		38			16:30			226		210		
04:45			22	78	33	106	184	16:45			181	766	203	796	1562
05:00			29		43			17:00			204		204		
05:15			43		45			17:15			185		220		
05:30			41		72			17:30			216		228		
05:45			38	151	69	229	380	17:45			200	805	239	891	1696
06:00			56		59			18:00			195		202		
06:15			70		88			18:15			175		198		
06:30			99		126			18:30			157		182		
06:45			123	348	123	396	744	18:45			155	682	160	742	1424
07:00			131		134			19:00			158		157		
07:15			219		195			19:15			124		134		
07:30			195		226			19:30			120		139		
07:45			159	704	189	744	1448	19:45			118	520	109	539	1059
08:00			202		188			20:00			123		117		
08:15			190		209			20:15			109		99		
08:30			191		167			20:30			91		88		
08:45			141	724	171	735	1459	20:45			89	412	95	399	811
09:00			118		160			21:00			95		100		
09:15			119		145			21:15			108		87		
09:30			118		156			21:30			102		76		
09:45			97	452	129	590	1042	21:45			59	364	71	334	698
10:00			114		130			22:00			69		58		
10:15			111		115			22:15			48		45		
10:30			89		129			22:30			53		49		
10:45			100	414	148	522	936	22:45			32	202	42	194	396
11:00			118		144			23:00			33		32		
11:15			114		163			23:15			34		26		
11:30			116		159			23:30			39		34		
11:45			112	460	147	613	1073	23:45			19	125	25	117	242
Total Vol.				3532		4136	**7668**					6229		6529	**12758**

Daily Totals

	NB	SB	EB	WB	Combined
			9761	10665	**20426**
			PM		
Split %			48.8%	51.2%	**62.5%**

	AM		
Split %	46.1%	53.9%	**37.5%**
Peak Hour	07:15	07:30	**07:15**
Volume	775	812	**1573**
P.H.F.	0.88	0.90	**0.93**

	PM		
	17:00	17:00	**17:00**
	805	891	**1696**
	0.93	0.93	**0.95**

Volumes for: Thursday, October 18, 2007 City: Westminster Project #: 07-1280-028

Location: McFadden Ave btwn Newland St & Magnolia St

AM Period	NB	SB	EB		WB			PM Period	NB	SB	EB		WB		
00:00			27		32			12:00			123		137		
00:15			12		22			12:15			118		144		
00:30			14		10			12:30			119		140		
00:45			14	67	14	78	145	12:45			157	517	159	580	1097
01:00			14		13			13:00			144		135		
01:15			18		13			13:15			110		135		
01:30			10		9			13:30			100		130		
01:45			17	59	12	47	106	13:45			123	477	122	522	999
02:00			11		9			14:00			158		135		
02:15			25		13			14:15			143		151		
02:30			5		3			14:30			157		151		
02:45			7	48	7	32	80	14:45			162	620	159	596	1216
03:00			9		8			15:00			170		160		
03:15			3		4			15:15			159		185		
03:30			11		8			15:30			194		150		
03:45			8	31	14	34	65	15:45			185	708	189	684	1392
04:00			11		16			16:00			189		178		
04:15			19		27			16:15			147		178		
04:30			23		32			16:30			213		192		
04:45			20	73	32	107	180	16:45			202	751	207	755	1506
05:00			31		47			17:00			186		198		
05:15			40		51			17:15			197		202		
05:30			47		84			17:30			189		229		
05:45			42	160	61	243	403	17:45			167	739	193	822	1561
06:00			49		59			18:00			182		201		
06:15			66		90			18:15			172		199		
06:30			119		131			18:30			134		166		
06:45			125	359	129	409	768	18:45			158	646	165	731	1377
07:00			160		139			19:00			147		160		
07:15			202		164			19:15			138		136		
07:30			197		215			19:30			115		138		
07:45			219	778	209	727	1505	19:45			116	516	121	555	1071
08:00			210		205			20:00			103		121		
08:15			190		170			20:15			84		101		
08:30			175		180			20:30			94		80		
08:45			149	724	151	706	1430	20:45			83	364	80	382	746
09:00			132		153			21:00			98		102		
09:15			99		137			21:15			86		90		
09:30			110		147			21:30			93		81		
09:45			98	439	126	563	1002	21:45			76	353	71	344	697
10:00			116		133			22:00			63		63		
10:15			105		137			22:15			49		50		
10:30			113		136			22:30			62		54		
10:45			99	433	145	551	984	22:45			31	205	34	201	406
11:00			98		136			23:00			42		40		
11:15			100		125			23:15			33		37		
11:30			99		122			23:30			34		38		
11:45			107	404	129	512	916	23:45			23	132	22	137	269
Total Vol.				3575		4009	**7584**					6028		6309	**12337**

Daily Totals

	NB	SB	EB	WB	Combined
			9603	10318	**19921**
			AM	**PM**	
Split %			47.1% 52.9% **38.1%**	48.9% 51.1% **61.9%**	
Peak Hour			07:15 07:30 **07:15**	16:30 16:45 **16:45**	
Volume			828 799 **1621**	798 836 **1610**	
P.H.F.			0.95 0.93 **0.95**	0.94 0.91 **0.96**	

Volumes for: Friday, October 19, 2007 City: Westminster Project #: 07-1280-028

Location: McFadden Ave btwn Newland St & Magnolia St

AM Period	NB	SB	EB		WB			PM Period	NB	SB	EB		WB		
00:00			42		30			12:00			106		120		
00:15			22		24			12:15			125		129		
00:30			22		23			12:30			106		127		
00:45			16	102	21	98	200	12:45			163	500	159	535	1035
01:00			10		10			13:00			159		142		
01:15			16		12			13:15			133		149		
01:30			15		8			13:30			123		148		
01:45			11	52	11	41	93	13:45			140	555	145	584	1139
02:00			14		12			14:00			171		150		
02:15			21		19			14:15			163		159		
02:30			8		8			14:30			190		153		
02:45			10	53	5	44	97	14:45			159	683	165	627	1310
03:00			12		9			15:00			159		189		
03:15			7		9			15:15			172		180		
03:30			10		11			15:30			194		181		
03:45			9	38	14	43	81	15:45			164	689	184	734	1423
04:00			17		18			16:00			195		181		
04:15			20		23			16:15			172		195		
04:30			27		35			16:30			212		207		
04:45			23	87	34	110	197	16:45			187	766	196	779	1545
05:00			19		32			17:00			203		221		
05:15			37		54			17:15			193		215		
05:30			47		83			17:30			185		218		
05:45			32	135	64	233	368	17:45			190	771	212	866	1637
06:00			44		54			18:00			201		228		
06:15			62		79			18:15			160		194		
06:30			111		115			18:30			158		189		
06:45			122	339	122	370	709	18:45			152	671	170	781	1452
07:00			166		135			19:00			138		162		
07:15			195		156			19:15			140		163		
07:30			200		206			19:30			134		145		
07:45			189	750	186	683	1433	19:45			111	523	135	605	1128
08:00			208		180			20:00			125		141		
08:15			178		193			20:15			103		113		
08:30			147		180			20:30			90		107		
08:45			130	663	170	723	1386	20:45			105	423	112	473	896
09:00			106		137			21:00			102		111		
09:15			129		136			21:15			76		98		
09:30			108		133			21:30			88		84		
09:45			94	437	124	530	967	21:45			65	331	73	366	697
10:00			88		122			22:00			92		85		
10:15			82		112			22:15			77		81		
10:30			102		129			22:30			65		68		
10:45			98	370	118	481	851	22:45			64	298	61	295	593
11:00			114		135			23:00			42		55		
11:15			102		128			23:15			45		37		
11:30			106		145			23:30			48		48		
11:45			126	448	141	549	997	23:45			34	169	49	189	358
Total Vol.			3474		3905		**7379**				6379		6834		**13213**

Daily Totals

	NB	SB	EB	WB	Combined
			9853	10739	**20592**
			AM	**PM**	
Split %			47.1% 52.9% **35.8%**	48.3% 51.7% **64.2%**	
Peak Hour			07:15 07:30 **07:30**	16:30 17:15 **17:15**	
Volume			792 765 **1540**	795 873 **1642**	
P.H.F.			0.95 0.93 **0.95**	0.94 0.96 **0.96**	

Volumes for: Saturday, October 20, 2007 City: Westminster Project #: 07-1280-028

Location: McFadden Ave btwn Newland St & Magnolia St

AM Period	NB	SB	EB		WB			PM Period	NB	SB	EB		WB		
00:00			41		49			12:00			188		203		
00:15			35		37			12:15			185		186		
00:30			36		35			12:30			179		201		
00:45			31	143	37	158	301	12:45			169	721	184	774	1495
01:00			25		30			13:00			162		181		
01:15			36		28			13:15			164		198		
01:30			14		9			13:30			189		196		
01:45			22	97	22	89	186	13:45			158	673	172	747	1420
02:00			14		20			14:00			144		151		
02:15			32		23			14:15			161		176		
02:30			23		20			14:30			167		186		
02:45			23	92	15	78	170	14:45			159	631	168	681	1312
03:00			19		16			15:00			161		170		
03:15			14		16			15:15			147		156		
03:30			10		11			15:30			180		169		
03:45			9	52	10	53	105	15:45			159	647	166	661	1308
04:00			13		11			16:00			147		151		
04:15			12		23			16:15			142		153		
04:30			14		30			16:30			136		158		
04:45			13	52	22	86	138	16:45			148	573	169	631	1204
05:00			14		20			17:00			147		149		
05:15			18		23			17:15			139		160		
05:30			26		37			17:30			142		159		
05:45			18	76	28	108	184	17:45			129	557	170	638	1195
06:00			24		28			18:00			165		180		
06:15			34		40			18:15			142		160		
06:30			30		51			18:30			134		153		
06:45			50	138	64	183	321	18:45			129	570	145	638	1208
07:00			39		62			19:00			136		137		
07:15			41		79			19:15			106		129		
07:30			65		91			19:30			114		132		
07:45			89	234	122	354	588	19:45			105	461	117	515	976
08:00			82		114			20:00			110		119		
08:15			99		147			20:15			104		110		
08:30			141		173			20:30			85		88		
08:45			127	449	169	603	1052	20:45			90	389	76	393	782
09:00			126		175			21:00			80		94		
09:15			118		164			21:15			77		72		
09:30			153		168			21:30			84		81		
09:45			134	531	172	679	1210	21:45			74	315	76	323	638
10:00			143		176			22:00			83		81		
10:15			134		181			22:15			56		62		
10:30			137		192			22:30			77		74		
10:45			172	586	199	748	1334	22:45			48	264	52	269	533
11:00			146		189			23:00			48		63		
11:15			160		195			23:15			42		46		
11:30			142		192			23:30			30		35		
11:45			180	628	201	777	1405	23:45			36	156	35	179	335
Total Vol.			3078		3916		**6994**				5957		6449		**12406**

	NB	SB	EB	WB	Combined
Daily Totals			9035	10365	**19400**
	AM				
Split %			44.0%	56.0%	**36.1%**
Peak Hour			11:45	11:15	**11:45**
Volume			732	791	**1523**
P.H.F.			0.97	0.97	**0.97**
	PM				
Split %			48.0%	52.0%	**63.9%**
Peak Hour			12:00	12:00	**12:00**
Volume			721	774	**1495**
P.H.F.			0.96	0.95	**0.96**

Volumes for: Wednesday, October 17, 2007 City: Westminster Project #: 07-1280-053

Location: Newland St btwn Bolsa Ave & Hazard Ave

AM Period	NB		SB		EB	WB		PM Period	NB		SB		EB	WB	
00:00	32		22					12:00	132		146				
00:15	27		21					12:15	133		129				
00:30	23		15					12:30	136		137				
00:45	11	93	11	69			162	12:45	119	520	156	568			1088
01:00	21		15					13:00	114		148				
01:15	8		6					13:15	126		142				
01:30	8		5					13:30	139		158				
01:45	16	53	13	39			92	13:45	142	521	179	627			1148
02:00	10		4					14:00	143		148				
02:15	13		2					14:15	141		154				
02:30	9		4					14:30	166		170				
02:45	10	42	7	17			59	14:45	174	624	177	649			1273
03:00	9		7					15:00	169		163				
03:15	6		6					15:15	198		160				
03:30	8		6					15:30	175		178				
03:45	11	34	11	30			64	15:45	221	763	182	683			1446
04:00	8		11					16:00	205		187				
04:15	16		15					16:15	218		176				
04:30	24		27					16:30	227		194				
04:45	34	82	39	92			174	16:45	240	890	191	748			1638
05:00	29		30					17:00	220		221				
05:15	37		49					17:15	250		198				
05:30	79		75					17:30	276		231				
05:45	71	216	61	215			431	17:45	274	1020	227	877			1897
06:00	73		83					18:00	277		169				
06:15	83		104					18:15	241		205				
06:30	116		155					18:30	245		179				
06:45	124	396	155	497			893	18:45	225	988	150	703			1691
07:00	97		165					19:00	184		152				
07:15	119		226					19:15	184		151				
07:30	158		257					19:30	119		114				
07:45	118	492	249	897			1389	19:45	155	642	108	525			1167
08:00	113		214					20:00	141		112				
08:15	107		208					20:15	141		100				
08:30	119		217					20:30	98		100				
08:45	116	455	202	841			1296	20:45	95	475	81	393			868
09:00	118		173					21:00	122		110				
09:15	125		122					21:15	113		107				
09:30	127		136					21:30	81		65				
09:45	118	488	128	559			1047	21:45	94	410	57	339			749
10:00	100		145					22:00	100		65				
10:15	135		109					22:15	82		82				
10:30	134		110					22:30	77		54				
10:45	143	512	112	476			988	22:45	66	325	52	253			578
11:00	142		130					23:00	47		48				
11:15	117		112					23:15	33		31				
11:30	145		152					23:30	50		29				
11:45	138	542	125	519			1061	23:45	36	166	25	133			299
Total Vol.		3405		4251			**7656**			7344		6498			**13842**

Daily Totals

NB	SB	EB	WB	Combined
10749	10749			**21498**

	AM			PM		
Split %	44.5%	55.5%	**35.6%**	53.1%	46.9%	**64.4%**
Peak Hour	10:15	07:15	**07:15**	17:15	17:00	**17:15**
Volume	554	946	**1454**	1077	877	**1902**
P.H.F.	0.97	0.92	**0.88**	0.97	0.95	**0.94**

Westminster
Bushard Street/Bolsa Avenue
Saturday, September 26, 2008

Pedestrian Totals

Interval Beginning	West Leg Bolsa Ave. Peds	North Leg Bushard St. Peds	East Leg Bolsa Ave. Peds	South Leg Bushard St. Peds	Total
12:00	7	7	2	2	**18**
12:15	3	6	1	2	**12**
12:30	3	8	3	2	**16**
12:45	5	12	6	6	**29**
13:00	3	4	4	2	**13**
13:15	1	3	1	2	**7**
13:30	5	6	4	3	**18**
13:45	4	6	5	4	**19**
Total	**31**	**52**	**26**	**23**	**132**

Counts Unlimited, Inc.
25286 Jaclyn Avenue
Moreno Valley, CA 92557
951-485-7934

Westminster
Bushard Street/Bolsa Avenue
Saturday, September 26, 2008

Adult Pedestrian

Interval Beginning	West Leg Bolsa Ave. Peds	North Leg Bushard St. Peds	East Leg Bolsa Ave. Peds	South Leg Bushard St. Peds	Total
12:00	7	6	1	2	**16**
12:15	2	4	1	2	**9**
12:30	3	5	2	1	**11**
12:45	5	4	4	6	**19**
13:00	3	2	4	2	**11**
13:15	1	2	1	2	**6**
13:30	4	5	3	3	**15**
13:45	4	6	5	4	**19**
Total	**29**	**34**	**21**	**22**	**106**

Counts Unlimited, Inc.
25286 Jaclyn Avenue
Moreno Valley, CA 92557
951-485-7934

Westminster
Bushard Street/Bolsa Avenue
Saturday, September 26, 2008

Adult Bicycle

Interval Beginning	West Leg Bolsa Ave. Peds	North Leg Bushard St. Peds	East Leg Bolsa Ave. Peds	South Leg Bushard St. Peds	Total
12:00	0	1	1	0	2
12:15	1	2	0	0	3
12:30	0	2	1	1	4
12:45	0	2	1	0	3
13:00	0	1	0	0	1
13:15	0	0	0	0	0
13:30	1	1	1	0	3
13:45	0	0	0	0	0
Total	**2**	**9**	**4**	**1**	**16**

Counts Unlimited, Inc.
25286 Jaclyn Avenue
Moreno Valley, CA 92557
951-485-7934

Westminster
Bushard Street/Bolsa Avenue
Saturday, September 26, 2008

Children Pedestrian

Interval Beginning	West Leg Bolsa Ave. Peds	North Leg Bushard St. Peds	East Leg Bolsa Ave. Peds	South Leg Bushard St. Peds	Total
12:00	0	0	0	0	0
12:15	0	0	0	0	0
12:30	0	0	0	0	0
12:45	0	1	1	0	2
13:00	0	0	0	0	0
13:15	0	0	0	0	0
13:30	0	0	0	0	0
13:45	0	0	0	0	0
Total	**0**	**1**	**1**	**0**	**2**

Counts Unlimited, Inc.
25286 Jaclyn Avenue
Moreno Valley, CA 92557
951-485-7934

Westminster
Bushard Street/Bolsa Avenue
Saturday, September 26, 2008

Children Bicycle

Interval Beginning	West Leg Bolsa Ave. Peds	North Leg Bushard St. Peds	East Leg Bolsa Ave. Peds	South Leg Bushard St. Peds	Total
12:00	0	0	0	0	0
12:15	0	0	0	0	0
12:30	0	1	0	0	1
12:45	0	5	0	0	5
13:00	0	1	0	0	1
13:15	0	1	0	0	1
13:30	0	0	0	0	0
13:45	0	0	0	0	0
Total	**0**	**8**	**0**	**0**	**8**

Counts Unlimited, Inc.
25286 Jaclyn Avenue
Moreno Valley, CA 92557
951-485-7934