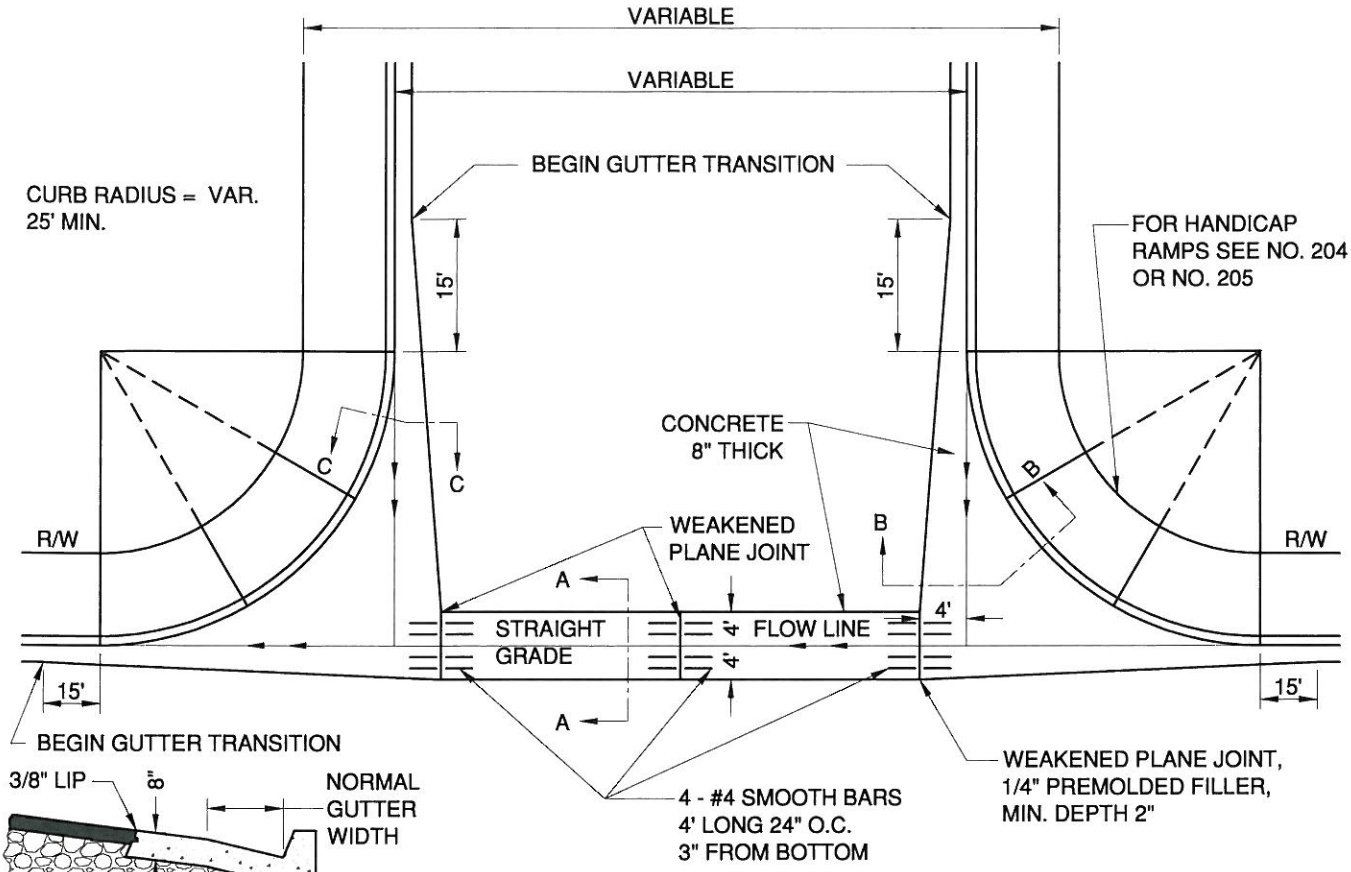

PLAN

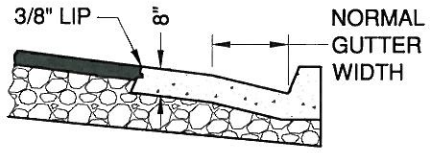

SECTION C-C

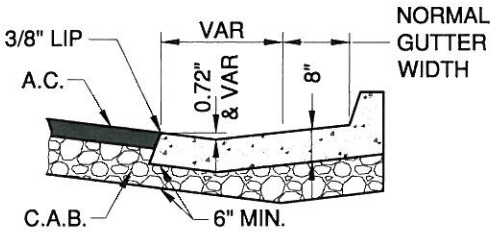

SECTION B-B

NOTES:

1. SMOOTH TROWEL 8" WIDE FLOW LINE IN CROSS-SECTION AND APRONS. MIN. CROSS-SECTION SLOPE = 0.2%.
2. WHEN R = 25'; Δ/3 FOR SCORING. WHEN R = 35'; Δ/4 FOR SCORING
3. WHEN REQUESTED: INTERSECTION DETAIL REQUIRED AT 20 SCALE WITH ELEVATIONS EVERY 10' OR 1/4 WIDTHS WHICHEVER IS LESS.
4. ALL CONCRETE SHALL BE 520-C-2500.
5. EXISTING AC SHALL BE REMOVED BY SAWCUTTING AT A MINIMUM DISTANCE OF TWO FEET FROM EDGE OF PAVEMENT.
6. CURB & GUTTER REMOVAL AND REPLACEMENT SHALL BE PER STANDARD No. 201.

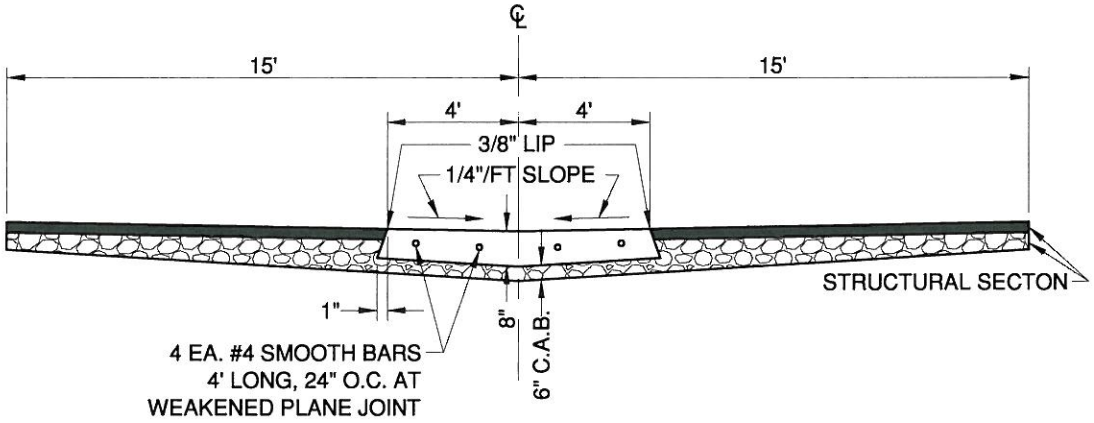

SECTION A-A

APPROVED:

P.W. DIRECTOR / CITY ENGINEER

REVISED DATE: 10/27/11

City of Westminster

DEPARTMENT OF PUBLIC WORKS

CROSS GUTTER

STANDARD NUMBER

206