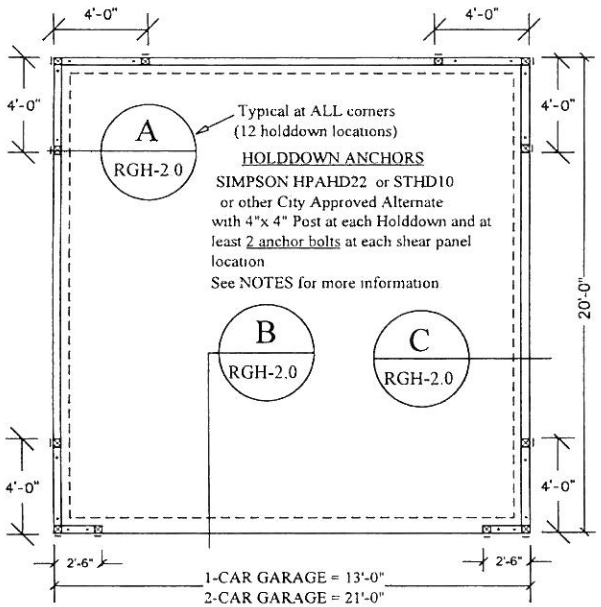

FOUNDATION PLAN

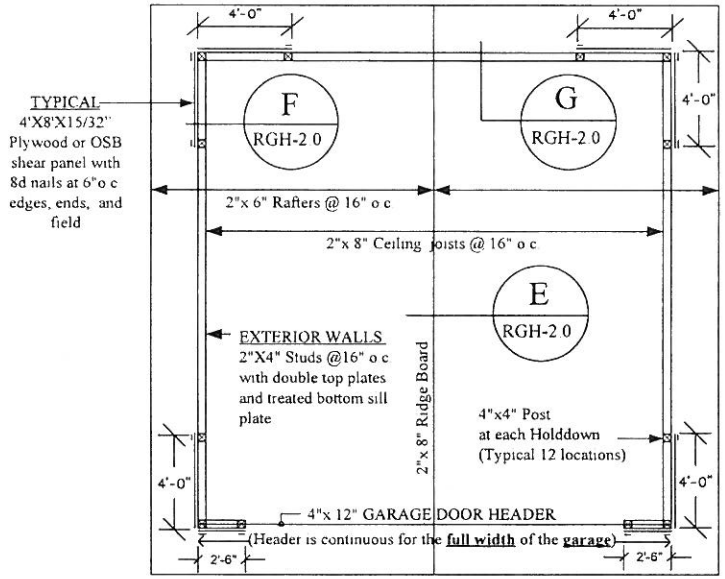

FRAMING PLAN

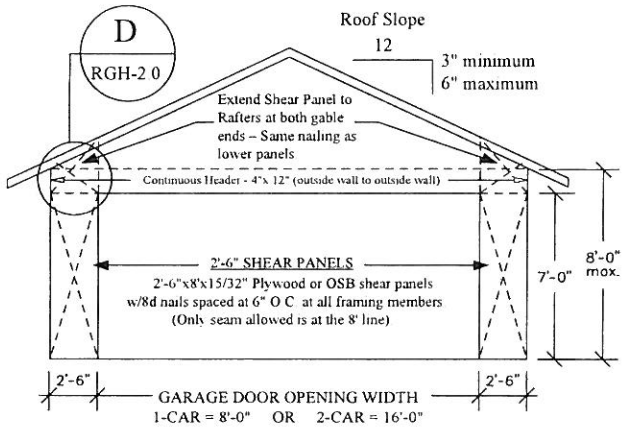

FRONT ELEVATION

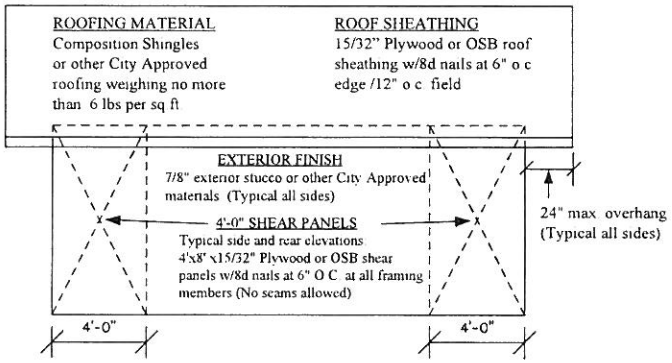

SIDE ELEVATIONS

NOTES:

FOUNDATION REQUIREMENTS

1. Minimum compressive strength of concrete shall not be less than 2500 psi (6 sack mix)
2. Sill plates shall be pressure treated or foundation grade redwood
3. Anchor bolts shall be spaced not more than 72" O C (except at shear panels where at least 2 bolts are required) and shall be embedded at least 7" into the concrete
4. Anchor bolts shall be a minimum of 1/2" diameter by 10" in length, with 3"x 3"x 0 229" plate washers
5. There shall be a minimum of two anchor bolts per piece of sill plate with one bolt located not more than 12" or less than 5" from each end
6. Concrete slab shall not be less than 3-1/2" thick Reinforcement recommended, but not required, to be 6"x 6" x10 gauge welded wire mesh
7. Footings shall bear on undisturbed soil
8. Soil at footings and under slab shall be well compacted

DOOR & WINDOW LIMITATIONS

One 36" wide door and one window (up to 48" wide) may be added to any wall as long as it is not located in a shear panel area. Stem wall to be omitted at doors and the headers for such doors and windows shall be a 4"x 6" Douglas Fir #2 or better

ALTERNATE ROOF FRAMING

Engineered roof trusses may be substituted for the rafters and ceiling joists shown on the plans Provide calculations from the manufacturer

LUMBER

2"x 4" studs shall be be "Stud Grade", all other framing lumber shall be Douglas Fir, #2 grade, or better Ceiling joists are NOT designed for attic storage.

ELECTRICAL

All electrical outlets (if any) which are less than 8' above floor level shall be GFCI protected All electrical (if any) shall conform to the applicable codes and regulations If electric power is provided to the garage, at least one switch controlled lighting outlet shall be provided inside the garage ond one additional at the 3' garage entry door (if one is provided) Check with your Building Inspector and the Utility Department before proceeding with electrical installations

DISCLAIMER

Other garage designs may be possible when provided with an engineered analysis Use of this conventional standard design is at the user's risk and carries no implied or inferred guarantee against failure or defects

City of Westminster
Building Division - www.ci.westminster.ca.us
8200 Westminster Boulevard, Westminster, CA 92683
Hours: M-Th 7:30 A.M.-5:30 P.M. F 7:30 A.M.-4:30 P.M.
Closed Alternate Fridays - (714) 895-2898

SCALE NONE

DRAWN DATE

REV.	DATE	APPR.
1		
2		
3		
4		
5		

G/BLDG/HANDOUTS/GARAGE1

STANDARD DETACHED GARAGE

RGH-1 0

SHEET

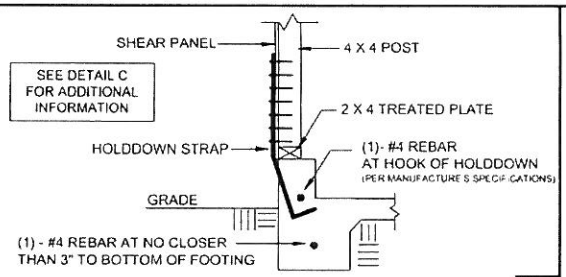

TYPICAL HOLDDOWN INSTALLATION

A

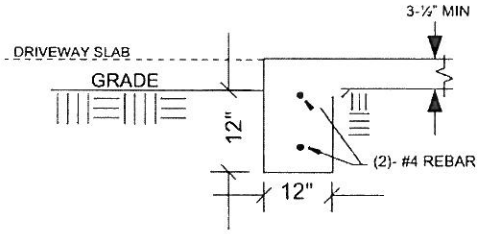

TYPICAL FOOTING @ VEHICLE OR OTHER DOOR

B

SEE NOTES ON SHEET 1 FOR ADDITIONAL INFORMATION.

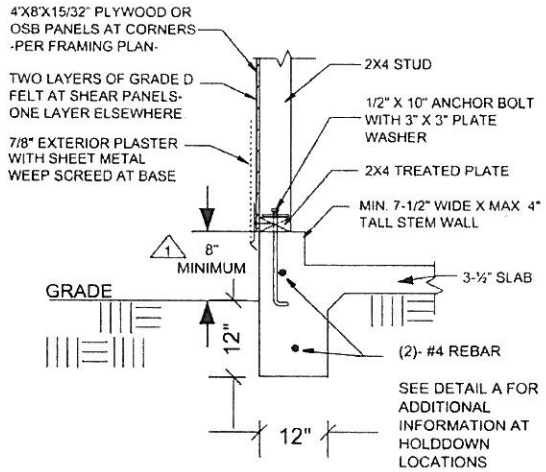

TYPICAL FOOTING & EXTERIOR WALL

C

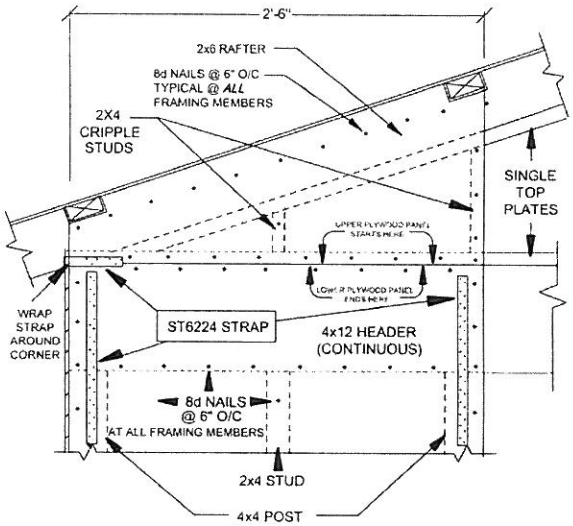

2'-6" WIDE SHEAR PANEL DETAIL

D

NOTE: THIS ROOF FRAMING DESIGN REQUIRES THAT CONTINUOUS 2X8 CEILING JOISTS BE PROVIDED AND ATTACHED TO EACH RAFTER AT THE TOP PLATE LINE PER DETAIL F

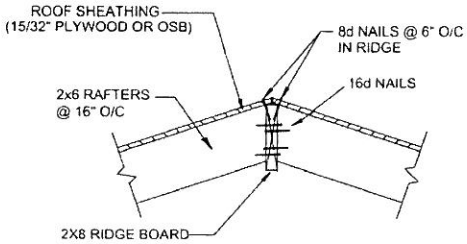

TYPICAL RIDGE CONNECTION

E

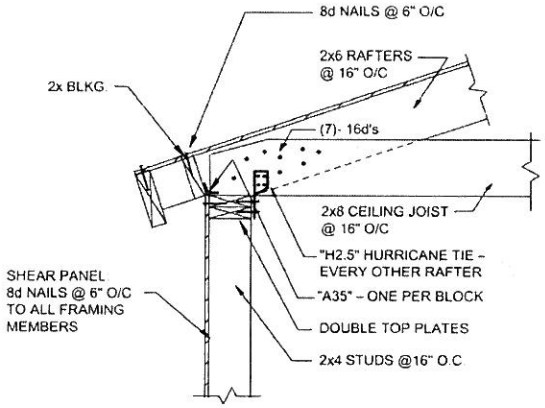

CONNECTION AT EXTERIOR BRACED WALL (RAFTER EAVES)

F

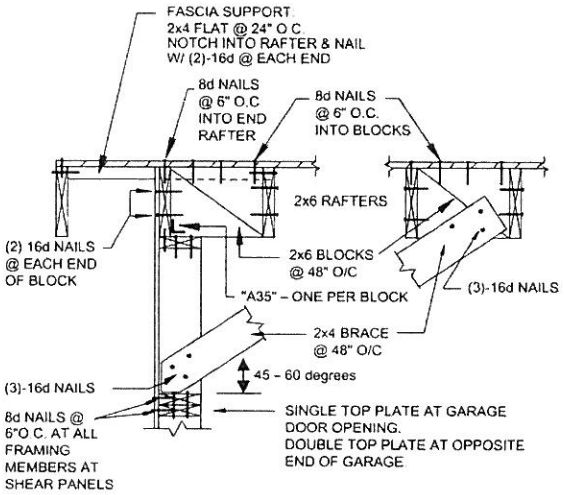

CONNECTION AT EXTERIOR BRACED WALL (GABLE ENDS)

G

City of Westminster
Building Division - www.ci.westminster.ca.us
8200 Westminster Boulevard, Westminster, CA 92683
Hours: M-Th 7:30 A.M.-5:30 P.M. F 7:30 A.M.-4:30 P.M.
Closed Alternate Fridays - (714) 895-2898

SCALE	NONE
DRAWN	DATE

REV	DATE	APPR
1		
2		
3		
4		
5		

GARAGE DETAILS

RGH-2.0

SHEET