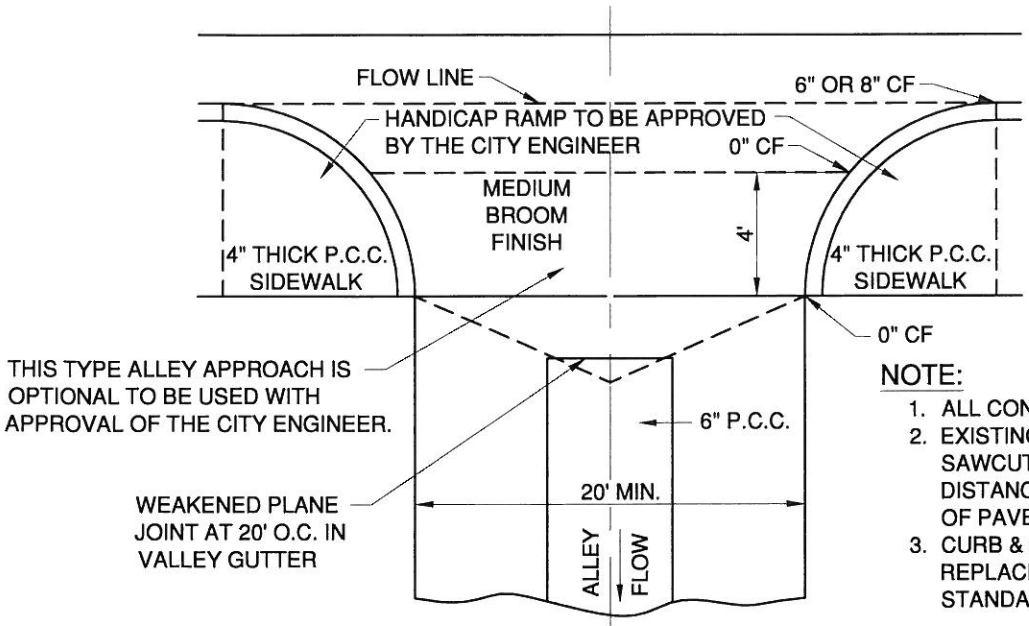

NOTE:

1. ALL CONCRETE SHALL BE 520-C-2500.
2. EXISTING AC SHALL BE REMOVED BY SAWCUTTING AT A MINIMUM DISTANCE OF TWO FEET FROM EDGE OF PAVEMENT.
3. CURB & GUTTER REMOVAL AND REPLACEMENT SHALL BE PER STANDARD No. 201.

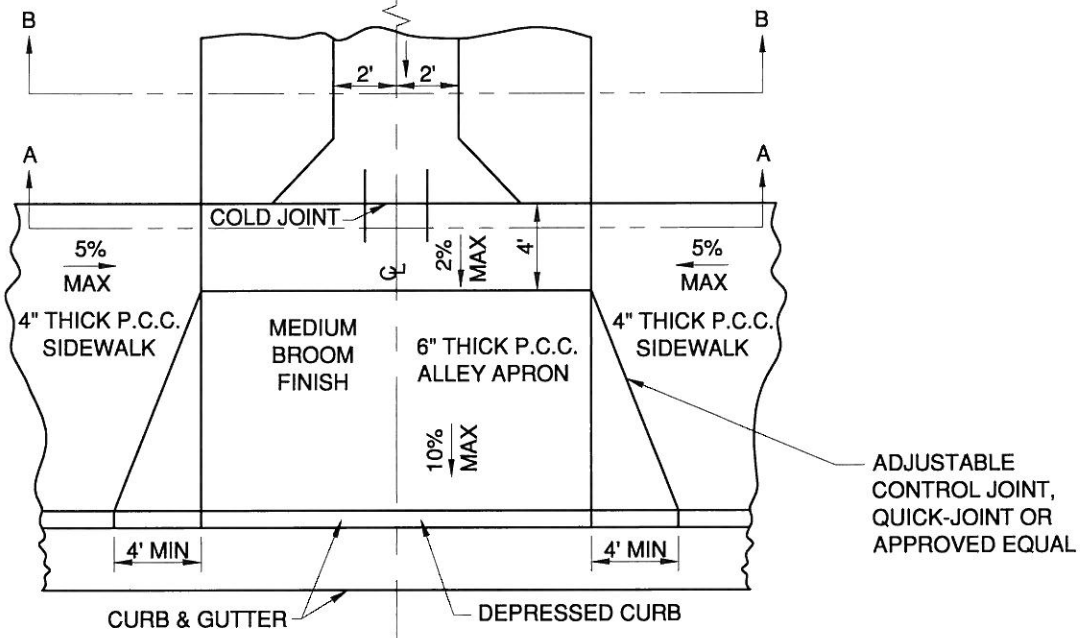

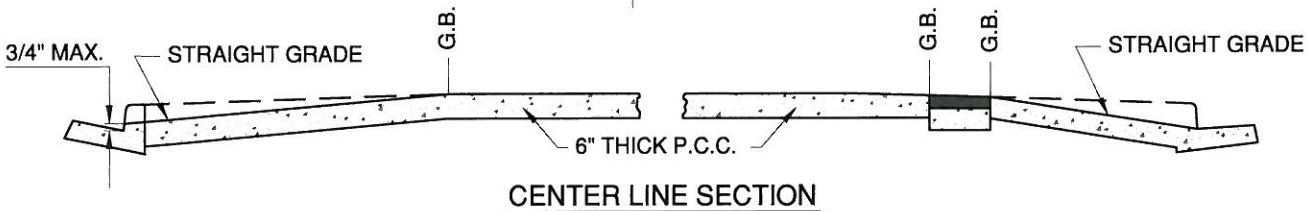

CENTER LINE SECTION

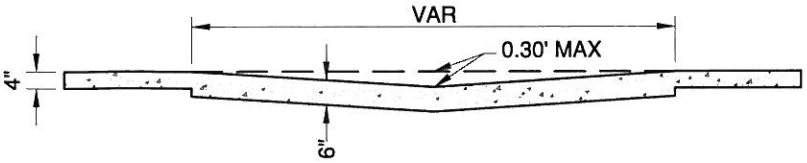

SECTION A-A

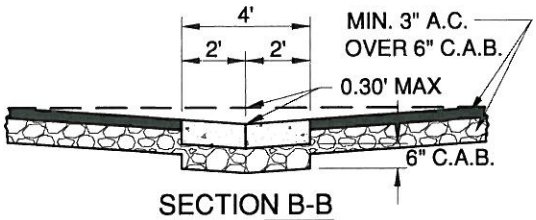

SECTION B-B

APPROVED:

P.W. DIRECTOR / CITY ENGINEER

REVISED DATE: 10/27/11

City of Westminster

DEPARTMENT OF PUBLIC WORKS

ALLEY AND ALLEY APRON

STANDARD NUMBER

207